1. There Is No Agenda Available For This Meeting, Please Review The Minutes.

2. May 24, 2016 Regular Meeting Packet

   Documents:

   MAY 24, 2016 REGULAR MEETING AGENDA.PDF
   POSSIBLE ADDITIONS TO THE MAY 24, 2016 AGENDA.PDF

TUESDAY, MAY 24, 2016
CITY OF COLLEGE PARK
COUNCIL CHAMBERS
7:30 P.M.

MAYOR AND COUNCIL REGULAR MEETING AGENDA

COLLEGE PARK MISSION STATEMENT

The City Of College Park Provides Open And Effective Governance And Excellent Services That Enhance The Quality Of Life In Our Community.

---

1. MEDITATION

2. PLEDGE OF ALLEGIANCE

3. ROLL CALL

4. ANNOUNCEMENTS

5. CITY MANAGER'S REPORT

6. ACKNOWLEDGMENTS

7. PROCLAMATIONS AND AWARDS

a. Designating June 2016 as Immigrant Heritage Month

8. AMENDMENTS TO AND APPROVAL OF THE AGENDA

9. PRESENTATIONS

a. Introduction of District 1 Commander, Major William Alexander

b. Outgoing Student Liaison Cole Holocker, 2014 – 2016

c. Outstanding Essayists in the Maryland Municipal League "If I Were Mayor, I Would…" Essay Contest:

<u>MML Outstanding Essayists</u>
MML Semi-Finalist - Alesha Mahboob, Al Huda School
MML Semi-Finalist - Abid Ehsan Noor, Al Huda School
MML Semi-Finalist - Rukaiya Shahbaz, Al Huda School
MML Prince George's County Winner - Georgia King, Friends Community School

School Outstanding Essayists
Nila Smartt, Hollywood Elementary School
Raneem Alhabashi, Al Huda School
Abdur-Rahman Shakir, Al Huda School
Maria Akaras, Friends Community School
Liam Garvin, Holy Redeemer School -
Kalani Lourim, Paint Branch Elementary School

10. PUBLIC COMMENT ON CONSENT AGENDA AND NON-AGENDA ITEMS - Speakers are asked to provide their name and address for the record, and are given three minutes to address the Council.

11. PUBLIC HEARINGS

a. None.

12. CONSENT AGENDA - Note: Consent Agenda items are routine items of business that are collectively presented for approval through a single motion. A Councilmember may request that an item be pulled from the Consent Agenda and placed under Action Items for separate discussion and action.

16-G-67 Authorization to allow free parking on summer weeknights after 5:00 p.m. in the City Hall lot and the downtown parking garage from May 28 to August 14, 2016 AND to extend the free Saturday parking originally authorized only for the downtown parking garage to the City Hall lot

16-G-68 Award of a contract to DMD Data Systems of Frankfort, Kentucky for $77,560.90 in a form to be approved by the City Attorney for the purchase of servers, VMWare and Lenovo storage equipment, and authorization for the City Manager to sign the contract.

16-G-69 Approval of a Four Cities Letter to the GSA in substantially the form attached expressing support for the FBI relocation to Greenbelt Station and for considering proximity to a Metro station a determining factor in location selection, and authorization for the Mayor to sign the letter

13. ACTION ITEMS

16-O-02 Adoption of Ordinance 16-O-02, An Ordinance of the Mayor and Council of the City of College Park, Maryland to Adopt the Fiscal Year 2017 Operating and Capital Budget of the City of College Park, Maryland

Motion By:
To:
Second:
Aye: ___
Nay: ___
Other: ____

16-R-03	SunTrust Master Lease #3 for Fleet Purchases – Steve Groh, Director of Finance	Motion By: To: Second: Aye: ___ Nay: ___ Other: ____
16-G-71	Authorization for the City Manager to sign a change request for the new Public Works modular building for an emergency generator (approximately $150,000) (will require a super majority) – Bob Stumpff, Director of Public Works	Motion By: To: Second: Aye: ___ Nay: ___ Other: ____
16-G-72	Approval to hang the Pride flag as a banner on the front of City Hall for one week from June 6 – 13, 2016	Motion By: Stullich To: Approve Second: Aye: ___ Nay: ___ Other: ____
16-G-74	Recommendation for Contract award for Development Consultant: Terry Schum, Director of Planning	Motion By: To: Second: Aye: ___ Nay: ___ Other: ____
16-G-73	Appointments to Boards and Committees	Motion By: To: Second: Aye: ___ Nay: ___ Other: ____

14. MAYOR AND COUNCILMEMBER REPORTS/COMMENTS

15. STUDENT LIAISON'S REPORT/COMMENTS

16. CITY MANAGER'S REPORT/COMMENTS

17. GENERAL COMMENTS FROM THE AUDIENCE

18. ADJOURN

STATUS/INFORMATION REPORTS FOR COUNCIL REVIEW

None.

- **This agenda is subject to change. For the most current information, please contact the City Clerk at 240-487-3501.**
- **Public Comment is taken during Regular Business meetings on the second and fourth Tuesdays of the month in one of the following ways. All speakers are requested to complete a card with their name and address for the record.**
  - **To comment about a topic not on the meeting agenda: Speakers are given three minutes to address the Council during "Public Comment on Non-Agenda Items" at the beginning of each Regular Meeting.**
  - **To comment on an agenda item during a Regular Business meeting: When an agenda item comes up for consideration by the Council, the Mayor will invite public comment prior to Council deliberation. Speakers are given three minutes to address the Council on that agenda item.**
- **In accordance with the Americans with Disabilities Act, if you need special assistance, please contact the City Clerk's Office at 240-487-3501 and describe the assistance that is necessary.**

Proclamation:

Immigrant Heritage Month

PROCLAMATION
CITY OF COLLEGE PARK, MARYLAND
DESIGNATING JUNE 2016
IMMIGRANT HERITAGE MONTH

WHEREAS, generations of immigrants from every corner of the globe have built our country's economy and created the unique character of our nation; and

WHEREAS, immigrants continue to grow businesses, innovate, strengthen our economy, and create jobs in College Park, and throughout the state of Maryland and the country; and

WHEREAS, immigrants have provided the United States with unique social and cultural influence, fundamentally enriching the extraordinary character of our nation; and

WHEREAS, immigrants have been tireless leaders not only in securing their own rights and access to equal opportunity, but have also campaigned to create a fairer and more just society for all Americans; and

WHEREAS, despite these countless contributions, the role of immigrants in building and enriching our nation has frequently been overlooked and undervalued throughout our history and continuing to the present day.

NOW, THEREFORE, BE IT PROCLAIMED by the City of College Park, Maryland, that June 2016 is designated as "Immigrant Heritage Month."

Proclaimed this _____day of _____, 2016.

_____

Patrick L. Wojahn, Mayor
City of College Park, Maryland

16-G-67

Free Parking on Summer Weeknights in the Garage and City Hall Lot

CITY OF COLLEGE PARK, MARYLAND
REGULAR COUNCIL MEETING AGENDA ITEM

AGENDA ITEM NUMBER 16-G-67

Prepared By: R.W. Ryan, Public Services Director **Meeting Date:** May 24, 2016

Presented By: R.W. Ryan, Public Services Director **Consent Agenda:** Yes

Originating Department:	City Council
Action Requested:	Authorization to allow free parking on summer weeknights after 5:00 p.m. in the City Hall lot and the downtown parking garage from May 28 to August 14, 2016; and, to extend free all day Saturday parking originally authorized only for the downtown parking garage to include the City Hall lot.
Strategic Plan Goal:	#3 High Quality Development and Reinvestment

Background/Justification:
At Council's request the following information was provided in consideration of an effort to promote downtown business over the summer months.

The following information shows the estimated revenue loss for both the Municipal Garage and the City Hall Lot, both individually and combined, as well as the combined revenue loss that would be incurred from violators during the same period. These estimates are based upon the time period of 5:00 p.m.-10:00 p.m. Free parking in other downtown lots (e.g. shopping center, Lehigh Road lot, and Applebee's lot) would require permission of the property owners.

The estimated parking meter revenue loss, based on 2015 history, if free parking was allowed downtown in the City Garage and on the City Hall Lot during weekday evenings between 5- 10 p.m. in the summer, would be as follows:

Municipal Garage (approximately 288 spaces): $9,135.10 ÷ 12 weeks = $761.26 per week average revenue loss. During summer evening hours, the garage is probably 75% vacant.

City Hall Lot (approximately 38 spaces): $3,150.20 ÷ 12 weeks = $262.52 per week average revenue loss. During summer evening hours, the City Hall is probably 40% vacant.

Combined Total: $12,285.30 ÷ 12 weeks = $1,023.78 per week average revenue loss.

Parking citations issued for 'Overtime Parking' violations for both the Municipal Garage and the City Hall Lot during weekdays after 5 p.m. last summer totaled 322 violations, which equaled $6,440.00.

These estimated revenue losses do not include revenue losses already expected from free summer Saturday parking in the Municipal Garage, estimated to be $7,000

The Council previously approved free all day Saturday parking in the garage; and, approved free Saturday parking at City Hall and free weeknight parking in both the garage and City Hall lots after 5 p.m. to go to this consent agenda.

Fiscal Impact:
Total estimated revenue loss for free summer garage and municipal lot weekend and weekday parking after 5 p.m. is estimated to be $26,000.

Council Options: #1: Allow free summer parking on weekday evenings in the downtown parking garage and City Hall lots, and free all day Saturday parking in both the garage and on the City Hall lot; and, forego approximately $26,000 in total parking fee and fine revenue. #2: Do not approve the request #3: Request additional information
Staff Recommendation: #1
Recommended Motion: *I move to approve free summer parking in the downtown parking garage and the City Hall surface lot from Saturday, May 28 through Sunday, August 14, 2016, as follows; All day Saturday, and Monday through Friday from 5-10 p.m.*
Attachments: None

16-G-68

Award of Contract for IT servers

CITY OF COLLEGE PARK, MARYLAND
REGULAR COUNCIL MEETING AGENDA ITEM

AGENDA ITEM NUMBER 16-G-68

Prepared By: Bill Gardiner, Assistant City Manager **Meeting Date:** May 24, 2016

Presented By: Bill Gardiner **Consent Agenda:** Yes

Originating Department: Information Technology

Action Requested: Approval of purchase contract of hardware (servers) and software to replace and upgrade existing systems at a cost of $77,560.90

Strategic Plan Goal: Goal 6: Excellent Services

Background/Justification:
The City currently uses separate, dedicated servers for various IT functions, such as hosting the website, managing email, and printers, storing files, etc. Some of the servers are more than five years old.

"Server Virtualization" is a more efficient use of server resources. Software is used to divide one server into multiple "virtual" servers. The City will avoid purchasing single servers each time we increase IT resources to improve services, and will reduce the City's carbon footprint. IT has been tasked with providing additional processes and now is the best time to stop purchasing single servers and move to virtual servers.

The City has used the recommended vendor for numerous equipment purchases over the past few years, and has been very satisfied with the product support from the firm's Reston, VA office. The warranties for the equipment are from Lenovo and VMware. The vendor will install the equipment. Payment occurs after the City has received the products. The contract will include affidavits from the firm regarding the City's non-discrimination requirements, certification of insurance, and indemnification.

Fiscal Impact:
The City received three quotes for purchasing the new virtual servers, and the lowest and recommended quote is $77,560.90 (the other bids were $78,429 and $91,338). The vendor's price is based on a "pre-negotiated technology contract" with Kentucky that includes discounts for hardware, software, and maintenance. However, the contract does not meet the City standard for a competitively bid process. Therefore, a super-majority vote of the Council is required to authorize the purchase.

The City can use the I-NET funds provided via the cable franchise agreements to purchase the servers. The funds are already budgeted in the following accounts:

CIP 301-8010-570.98-10 COMPUTER HARDWARE
011004 INSTITUTIONAL NETWORK/PEG

Council Options:
#1: Authorize the purchase of server, VMware, and Lenovo storage equipment from DMD Data Systems for $77,560.90.
#2: Request additional information from staff and bring back the item at a future Worksession.
#3: Reject the purchase of virtual servers at this time.

Staff Recommendation:
#1

Recommended Motion: *I move that the City Council award a contract to DMD Data Systems of Frankfort, Kentucky for $77,560.90 in a form to be approved by the City Attorney for the purchase of servers, VMware and Lenovo storage equipment, and authorize the City Manager to sign the contract.*
Attachments: None. The DMD Data Systems quote with a detailed list of all items, quantities, and prices has been provided to Council.

16-G-69

Four Cities Letter on FBI Relocation

CITY OF COLLEGE PARK, MARYLAND
REGULAR MEETING AGENDA ITEM

AGENDA ITEM 16-G-69

Prepared By: Terry Schum, Planning Director **Meeting Date:** 5/24/16

Presented By: Terry Schum **Proposed Consent Agenda:** Yes

Originating Department:	At the Request of Mayor Wojahn
Issue Before Council:	Approval of a Four Cities Letter to the General Services Administration (GSA) supporting the FBI Headquarters relocation to the Greenbelt Metro Station area and retaining proximity to Metro as a factor in site selection.
Strategic Plan Goal:	Goal 3: High Quality Development and Reinvestment

Background/Justification:
Based on reports that GSA is no longer considering proximity to Metro and Metro access as a factor in the site selection for a new FBI Headquarters campus, the Four Cities Coalition would like to have the Mayors of College Park, Greenbelt, Berwyn Heights and New Carrollton sign and send a letter to the GSA. The letter reiterates support for the relocation of the FBI to the Greenbelt Metro Station area and stresses that the site selected should be transit oriented and have walkable access to public transportation especially the Metro system.

Fiscal Impact:
The relocation of the FBI to Greenbelt Station should benefit the City of College Park economy.

Council Options:
#1: Approve the signing of the letter.
#2: Do not support the signing of the letter.

Staff Recommendation:
1

Recommended Motion:
I move that the City Council authorize the Mayor to sign the Four Cities Coalition letter to the GSA in substantially the form attached.

Attachments:
1. Four Cities Coalition Letter

Four Cities Coalition

May 16, 2016

U.S. General Services Administration
Attention: Denise Decker, NEPA Team Lead
301 7th Street, SW, Room 4004
Washington, D.C. 20407

RE: Federal Bureau of Investigation Headquarters Consolidation
Solicitation Number: FBIHQSiteEOI

Dear Ms. Decker:

The Four Cities Coalition of the Town of Berwyn Heights, and the Cities of College Park, Greenbelt and New Carrollton wish to again express its strong support for locating a new headquarters for the Federal Bureau of Investigations (FBI) adjacent to the Greenbelt Metro Station. As such, we are now writing to express our concern with reports that GSA is not considering proximity to Metro and Metro access determining factors in deciding on a location for the new headquarters for the FBI. As one of the largest Federal projects in the Washington region in a generation, it is critical that GSA fully consider the potential benefits of locating the FBI in direct proximity to a Metro station.

That the Request for Proposals issued by GSA in January lists resilience and sustainability, first among site considerations, is laudable. A new FBI Headquarters that is modern, innovative and includes high performance systems and energy saving technologies will ensure the long-term viability and cost-effectiveness of the building. But sustainability goes beyond the four walls of the building. Locating the facility in a location that is truly transit-oriented with convenient, walkable access to Metro, MARC and other public transportation supports regional sustainability and smart growth goals and is equally critical to the long-term viability and cost-effectiveness of the facility. The failure to prioritize public transportation raises serious questions about GSA and FBI's commitment to these goals.

Failure to fully incentivize the use of public transportation will increase road congestion and greenhouse gas emissions. It adds significantly to the initial and ongoing cost of the facility, will likely require new roads to be constructed and will pass the cost of maintaining those roads to local jurisdictions in the future. At Greenbelt, additional Metro ridership by FBI employees will require little or no change to service by WMATA.

The FBI is America's top law enforcement agency. The FBI's new home will be highly visible to the public. It should stand as a symbol, not only of the FBI's mission but also of the Government's commitment to innovative design and principles of resilience and sustainability. By fully considering the benefits of proximity to Metro, the GSA could create a public reminder of those principles. We hope that GSA reconsiders its position.

Sincerely,

Cheryl Jewitt, Mayor Town of Berwyn Heights	Patrick L. Wojahn, Mayor City of College Park
Emmett V. Jordan, Mayor City of Greenbelt	Andrew C. Hanko, Mayor City of New Carrollton

cc: City Council
Honorable Barbara Mikulski
Honorable Benjamin Cardin
Honorable Steny Hoyer
Honorable Paul Pinsky
Honorable Anne Healey
Honorable Tawanna Gaines
Honorable Alonzo Washington
Honorable Rushern Baker
Honorable Derrick Leon Davis
Honorable Todd Turner
Garth Beall, Renard Development
Bob Rosenbush, Maryland Department of Planning
David Iannucci, Prince George's County
Celia Craze, Director of Planning & Community Development
Jessica Bellah, Community Planner
Greenbelt News Review

Add:
Honorable D. Glaros
Honorable M. Lehman

16-O-02

Budget Adoption

CITY OF COLLEGE PARK, MARYLAND
REGULAR COUNCIL MEETING AGENDA ITEM

AGENDA ITEM NUMBER 16-O-02

Prepared By: Stephen Groh, Director of Finance

Meeting Date: May 24, 2016

Presented By: Stephen Groh, Director of Finance

Consent Agenda: No

Originating Department: Finance

Action Requested: Adopt the FY2017 Operating and Capital Budget of the City of College Park

Strategic Plan Goal: Goal 6: Excellent Services

Background/Justification:
Budget Ordinance 16-O-02, incorporating the City Manager's Proposed Budget and the changes made by Mayor & Council at budget worksessions, was introduced on April 25. A public hearing was held on May 10. The City's FY2017 tax rate must be certified to Prince George's County by May 25 in order to be included in the County's consolidated real property tax billing. Charter section C10-3D requires that the budget be adopted by May 31 of the fiscal year currently ending. The adopted budget will be effective July 1.

Fiscal Impact:
An adopted budget is required to fund FY2017 operations.

Council Options:
#1: Adopt the FY2017 budget as introduced
#2: Make any of the proposed amendments attached
#3: Make any other amendments

Staff Recommendation:
Adopt the FY2017 budget with or without amendments

Recommended Motion:
I move to adopt Ordinance 16-O-02, an Ordinance of the Mayor and Council of the City of College Park, Maryland to Adopt the Fiscal Year 2017 Operating and Capital Budget of the City of College Park, Maryland

Attachments:
1. Ordinance 16-O-02 as introduced
2. Proposed Budget Amendments #1-7

ORDINANCE 16-O-02

AN ORDINANCE OF THE MAYOR AND COUNCIL OF THE CITY OF COLLEGE PARK, MARYLAND TO ADOPT THE FISCAL YEAR 2017 OPERATING AND CAPITAL BUDGET OF THE CITY OF COLLEGE PARK, MARYLAND

BE IT ORDAINED, by the Mayor and Council of the City of College Park, Maryland, that the following sums and amounts are hereby appropriated for the fiscal year beginning July 1, 2016 and ending June 30, 2017, the said revenues being used to defray expenses and operations of the City of College Park, Maryland in accordance with the following schedule:

General Fund

Revenues	
Taxes	
Real Property Taxes	$ 7,658,722
Personal Property Taxes	952,500
Income Taxes	1,660,000
Other Local Taxes	680,000
State Shared Taxes	447,781
County Shared Taxes	650,000
Licenses & Permits	
Business Licenses	43,000
Other Licenses & Permits	907,653
Utility Franchise Fees	315,000
Intergovernmental	
Federal Grants	40,000
State Grants	257,055
County Grants	44,717
Charges for Services	
General Government Charges	5,200
Highways & Streets	594,900
Sanitation & Waste Removal	394,474
Health Charges	12,000
Fines & Fees	
Fines	2,770,400
Miscellaneous Revenues	
Investment Earnings	132,520
Property & Equipment Rental	100,500
Other Revenues	1,370
Total Operating Revenues	$ 17,667,792
Non-Revenue Receipts	
Interfund Transfer from Parking Debt Service Fund	211,687
Use of Unassigned Reserve	0

Total Revenues	**$ 17,879,479**
Expenditures	
General Government	$ 3,213,414
Public Services	4,295,936
Planning, Community & Economic Development	695,738
Youth, Family & Senior Services	1,172,995
Public Works	5,480,749
Contingency	10,000
Debt Service	525,207
Interfund Transfer to Capital Projects Fund	2,485,440
Total Expenditures	**$ 17,879,479**

Parking Debt Service Fund

Revenues	
Highways & Streets	
Parking Meter Revenue	$ 220,000
Fines	
Parking Fines Revenue	50,500
Total Revenues	**$ 270,500**
Expenditures	
Interfund Transfer to General Fund	$ 211,687
Total Expenditures	**$ 211,687**

BE IT FURTHER ORDAINED that:

1. The tax levy be, and the same is hereby set at thirty-three and 5/10 cents ($0.335) per one hundred dollars ($100.00) of full value assessment on all taxable real property located within the corporate limits of the City of College Park, Maryland;

2. The tax levy be, and the same is hereby set at eighty-three and 8/10 cents ($0.838) per one hundred dollars ($100.00) of full value assessment on all taxable personal property located within the corporate limits of the City of College Park, Maryland;

3. In addition to the projected General Fund operating revenue of $17,667,792, the sum of $211,687 is transferred from the Parking Debt Service Fund and the sum of $0 is appropriated from prior years' unassigned fund balance;

4. The net speed enforcement camera revenues, after recovery of the costs of implementing and administering the program, are allocated solely for public safety purposes, including pedestrian safety programs;

5. The above listing of revenues and expenditures represents a summary of the detailed material contained in a document entitled "City Manager's Proposed Operating and Capital Budget for Fiscal Year 2017", with amendments; said document and any amendments thereto are incorporated herein by this reference;

6. By adoption of this Ordinance, the FY2017 Pavement Management Plan and the FY2017 Pay Plan (including Job Class Table and Pay Table) contained in the FY2017 proposed operating budget with amendments, if any, are hereby adopted by this reference;

7. By adoption of this Ordinance, the City includes its employees in the Reformed Contributory Pension Plan of the Maryland State Retirement and Pension System (MSRP) and authorizes payment of retirement benefits into the said pension system, on the terms and conditions set forth in State law;

8. The Unrestricted Capital Projects Fund and Restricted Capital Projects Fund reserve accounts shall be re-appropriated as required in order to fund the projects included in the Capital Improvement Plan as adopted by this Ordinance;

9. The Capital Budget and the Five Year Capital Improvement Plan for Fiscal Year 2017 in the amount of $49,284,954, as listed and described in the capital projects fund section of the "City Manager's Proposed Operating and Capital Budget for Fiscal Year 2017" with amendments is hereby adopted;

10. The Parking Debt Service Fund is hereby budgeted for fiscal year 2017. This fund was established in fiscal year 2008 to receive 50% of the additional parking meter revenue generated from the FY2008 increase in parking meter rates. Beginning in FY2011, this fund also receives the $2.50 increase in parking tickets for expired meter and overtime parking. The revenues retained in the Parking Debt Service Fund will be used to offset debt service costs on the parking garage debt;

11. Personal property tax accounts delinquent for a period of ninety (90) days shall be assessed a $100.00 late payment penalty;

12. Should any section of this Ordinance be determined to be invalid, such invalidity shall not affect any other sections; and

13. This Ordinance shall become effective at the expiration of twenty (20) calendar days following its adoption or July 1, 2016, whichever is later.

AND BE IT FURTHER ORDAINED by the Mayor and Council of the City of College Park, Maryland that, upon introduction of this Ordinance, the City Clerk shall distribute a copy of same to each council member and shall publish a fair summary of this Ordinance in a newspaper

having general circulation in the City, together with a notice setting out the time and place for a public hearing hereon and for its consideration by the City Council.

A public hearing was held on this budget Ordinance at 7:30 p.m. on the 10th day of May, 2016 in the Council Chambers, City Hall, 4500 Knox Road, College Park, Maryland. The public hearing followed the date the "City Manager's Proposed Operating and Capital Budget for Fiscal Year 2017" was available for inspection by the public by at least two (2) weeks, and was held in connection with a regular Council meeting. All persons interested had an opportunity to be heard. After the public hearing, the Council may adopt the proposed budget Ordinance, with or without amendment, without the need for further advertising or public hearings.

Introduced on the 25th day of April, 2016

Adopted on the _____ day of May, 2016

Effective on the 1st day of July, 2016

_____
Patrick L. Wojahn, Mayor

ATTEST:

_____
Janeen S. Miller, CMC, City Clerk

APPROVED AS TO FORM:

_____
Suellen M. Ferguson, City Attorney

16-O-02
PROPOSED BUDGET AMENDMENT #1

I move to amend the FY2017 budget to reduce the real property tax rate from 0.335 to 0.325 per $100 of assessed valuation and to reduce the personal property tax rate from 0.838 to 0.812 per $100 of assessed valuation. The resulting $260,766 reduction in revenue, comprised of $231,291 in real property tax and $29,475 in personal property tax, would be offset by a $260,766 reduction in the interfund transfer to the City Hall C.I.P. project.

Motion By: _____
To Amend
Second: _____
Aye: _____ Nay: _____
Other: _____

16-O-02
PROPOSED BUDGET AMENDMENT #2

I move to amend the FY2017 budget to provide a one-time grant of $50,000 to College Park City-University Partnership (CPCUP) for their homeownership grant program. This additional expenditure would be offset by a $50,000 reduction in the interfund transfer to the City Hall C.I.P. project.

Motion By: _____
To Amend
Second: _____
Aye: _____ Nay: _____
Other: _____

16-O-02
PROPOSED BUDGET AMENDMENT #3

I move to amend the FY2017 budget to eliminate the proposed FTE increase from 0.50 to 1.00 FTE for the Seniors Program Caseworker in Youth, Family & Senior Services-Seniors Program. This change would reduce expenditures by $44,598, including wages of $22,199 and fringe benefits of $22,399. This expenditure reduction would be offset by a $44,598 increase in the interfund transfer to the City Hall C.I.P. project.

Motion By: _____
To Amend
Second: _____
Aye: _____ Nay: _____
Other: _____

16-O-02
PROPOSED BUDGET AMENDMENT #4

I move to amend the FY2017 budget to eliminate the employee engagement survey in the amount of $20,000 in Administration-Human Resources. This expenditure reduction of $20,000 would be offset by a $20,000 increase in the interfund transfer to the City Hall C.I.P. project.

Motion By: _____
To Amend
Second: _____
Aye: _____ Nay: _____
Other: _____

16-O-02
PROPOSED BUDGET AMENDMENT #5

I move to amend the FY2017 budget to eliminate the statistically significant community survey in the amount of $30,000 in Administration-Public Relations. This expenditure reduction of $30,000 would be offset by a $30,000 increase in the interfund transfer to the City Hall C.I.P. project.

Motion By: _____
To Amend
Second: _____
Aye: _____ Nay: _____
Other: _____

16-O-02
PROPOSED BUDGET AMENDMENT #6

I move to amend the FY2017 budget to eliminate the contribution to the College Park City-University Partnership (CPCUP) in the amount of $125,000 in Administration-Mayor & Council. This expenditure reduction of $125,000 would be offset by a $125,000 increase in the interfund transfer to the City Hall C.I.P. project.

Motion By: _____
To Amend
Second: _____
Aye: _____ Nay: _____
Other: _____

16-O-02
PROPOSED BUDGET AMENDMENT #7

I move to amend the FY2017 budget to eliminate the contribution to University of Maryland for the Interfraternity Council tailgates in the amount of $7,000 in Administration-Public Relations. This expenditure reduction of $7,000 would be offset by a $7,000 increase in the interfund transfer to the City Hall C.I.P. project.

Motion By: _____
To Amend
Second: _____
Aye: _____ Nay: _____
Other: _____

16-R-03

SunTrust
Master Lease #3

CITY OF COLLEGE PARK, MARYLAND
REGULAR COUNCIL MEETING AGENDA ITEM

AGENDA ITEM NUMBER 16-R-03

Prepared By: Stephen Groh, Director of Finance

Meeting Date: May 24, 2016

Presented By: Stephen Groh, Director of Finance

Consent Agenda: No

Originating Department: Finance

Action Requested: Adoption of a Resolution to authorize a $2,000,000 five-year tax-exempt Master Lease from SunTrust Equipment Finance & Leasing Corp. for the purchase of vehicles.

Strategic Plan Goal: Goal 6: Excellent Services

Background/Justification:
For the past 18+ years, the City has utilized master leases for purchases of vehicles and equipment. Borrowing a lump sum in advance on a 5-year lease (equivalent to a loan) provides greater flexibility in making vehicle purchases as we primarily purchase vehicles on state or county contracts and the timing of these purchases and the long delivery times does not always coincide with our budget process. Having funding in place in advance, and just budgeting for debt service each year, smoothes out the budgeted expenditures for large purchases such as $290,000 refuse trucks.

SunTrust Bank is the primary tax-exempt leasing entity for smaller municipalities in the area. We have used them for all of our previous leases. In the FY2016 Capital Improvement Program (C.I.P.) project for Vehicle Replacement, we budgeted for a new $2,000,000 master lease to be obtained in FY2016. We have obtained a preliminary interest rate quote of 2.22% for 5 years; the exact rate will be determined at settlement. As the lease is secured by a State Department of Assessments & Taxation (SDAT) financing statement, the lease is NOT general obligation debt of the City. Bond counsel from Miles & Stockbridge has prepared the attached Resolution 16-R-03 and is negotiating with SunTrust Equipment Finance & Leasing Corp. on a few minor items in the master lease agreement. Once the Resolution is adopted, documents will be executed, bond counsel will issue their tax opinion, and the lease will be funded. The $2,000,000 will be immediately drawn and deposited in an interest-bearing account with SunTrust Bank as escrow agent. As we purchase vehicles under the lease, we will submit requests to SunTrust for reimbursement.

Fiscal Impact:
Beginning in FY2017, we will budget $423,000 per year for the debt service on the 5-year lease in the Vehicle Replacement C.I.P. project.

Council Options:

#1: Adopt the Resolution as presented
#2: Direct staff to proceed in a different manner

Staff Recommendation:
#1 Adopt the Resolution as presented

Recommended Motion:
I move to adopt Resolution 16-R-03, a Resolution of the Mayor and Council of the City of College Park, Maryland, Authorizing the City Manager to Execute an Equipment Master Lease-Purchase Agreement with SunTrust Equipment Finance & Leasing Corp. for the Acquisition of Vehicles

Attachments:
1. Resolution 16-R-03
2. Master Lease #3 Equipment Listing

A RESOLUTION OF THE MAYOR AND COUNCIL OF THE CITY OF COLLEGE PARK, MARYLAND, AUTHORIZING THE CITY MANAGER TO EXECUTE AN EQUIPMENT MASTER LEASE-PURCHASE AGREEMENT WITH SUNTRUST EQUIPMENT FINANCE & LEASING CORP. FOR THE ACQUISITION OF VEHICLES

A RESOLUTION of the City of College Park, Maryland (the "City") to authorize the City Manager to execute an Equipment Master Lease-Purchase Agreement (the "Agreement"), the fiscal year 2016 draw on said Agreement to be for an aggregate principal amount of Two Million Dollars ($2,000,000), for the public purpose of financing the acquisition of vehicles (the "Vehicles") essential for the operations of the City; the obligations of the City under the Agreement are its limited obligations and not upon its full faith and credit or pledge of its taxing powers and shall be subject to appropriations of the City in each fiscal year during the term of the Agreement; providing that certain additional matters shall be reserved unto the City Manager as prescribed by this Resolution; and determining various matters in connection therewith.

RECITALS

WHEREAS, the City is a municipal corporation of the State of Maryland, organized and operating under a charter (the "Charter") adopted in accordance with Article XI-E of the Constitution of Maryland and Article 23A of the Annotated Code of Maryland as amended; and

WHEREAS, Subsection F of Section C7-4 "Borrowing and Contract Obligations" of the Charter of the City of College Park, Maryland authorizes the City to enter into equipment lease financing arrangements; and

WHEREAS, the City has determined that it is in its best interests to enter into a certain equipment master lease-purchase agreement with SunTrust Equipment Finance & Leasing Corp. (the "Agreement"), the fiscal year 2016 draw on said Agreement to be for an aggregate principal amount of Two Million Dollars ($2,000,000) for a term not to exceed five (5) years from the date of execution, for the public purpose of financing the acquisition of the Vehicles essential for the operations of the City; and

WHEREAS, the City may make certain expenditures in connection with the acquisition of the Vehicles prior to the execution of the Agreement; and

WHEREAS, the City intends to finance all or a portion of the cost of the Vehicles through the Agreement, the interest on which is intended to be excludible from the gross income of the recipient for federal income tax purposes; and

WHEREAS, the City reasonably expects that a portion of the acquisition cost of the Vehicles may be paid by the City sixty (60) days prior to this Resolution and prior to entering into the Agreement.

NOW, THEREFORE, BE IT RESOLVED BY THE MAYOR AND COUNCIL OF THE CITY OF COLLEGE PARK, MARYLAND THAT:

Section 1. The City is hereby authorized to enter into, and the City Manager is hereby authorized to execute and deliver, an Equipment Master Lease-Purchase Agreement with SunTrust Equipment Finance & Leasing Corp. (the "Lessor") for financing the acquisition of Vehicles, the fiscal year 2016 draw on said Agreement to be for an aggregate principal amount of Two Million Dollars ($2,000,000), for a term not to exceed five (5) years, and at an annual interest rate of approximately two and 22/100 percent (2.22%) per annum; the exact rate to be determined at time of closing.

Section 2. The Agreement shall be in form satisfactory to the Mayor and Council of the City of College Park, Maryland and shall be subject to such provisions, terms, insertions, omissions, variations or changes as may be deemed necessary or appropriate which shall be acceptable to the Mayor and Council, and the Mayor and Council are hereby authorized by this Resolution to approve such provisions of the Agreement as they may deem appropriate, subject to the review and approval of the City Attorney and/or minor revision by bond counsel.

Section 3. The Agreement (i) is not a general obligation of the City, (ii) does not constitute a pledge of and does not involve the full faith and credit or the taxing power of the City, and (iii) does not constitute a debt of the City within the meaning of Section 7 of Article XI of the Constitution of the State of Maryland. The City's obligations as lessee under the Agreement shall be subject to appropriation for each and every fiscal year during the term of the Agreement.

Section 4. The City Manager is hereby authorized to execute and deliver in connection with the Agreement, such additional certificates and documents relating to the Agreement as are deemed necessary or desirable by the City Manager, upon the advice of counsel (including the City Attorney and bond counsel), and to effect the execution and delivery of the Agreement.

Section 5. The officers and employees of the City are hereby authorized and directed to do and perform all acts and things required of them by the provisions of this Resolution, for the full, punctual and complete performance of all terms, covenants and provisions of the Agreement and to do and perform all acts and to execute, seal and deliver all documents or instruments of writing which may be necessary or desirable to carry out the legislative intent of this Resolution.

Section 6. This Resolution is intended to be a declaration of official intent on behalf of the City of College Park, Maryland pursuant to the requirements of Treasury Regulations 1.150-2.

Section 7. The City reasonably expects that a portion of the capital expenditures for the acquisition of the Vehicles may be paid prior to entering into the Agreement and that the proceeds of the fiscal year 2016 draw under the Agreement in a maximum principal amount of Two Million Dollars ($2,000,000) may be used, in whole or in part, to reimburse the City for capital expenditures paid during the period of sixty (60) days prior to entering into the Agreement.

INTRODUCED by the Mayor and Council of City of College Park, Maryland at a regular meeting on the _____ day of _____, 2016.

ADOPTED by the Mayor and Council of City of College Park, Maryland at a regular meeting on _____ the day of _____, 2016.

EFFECTIVE on the _____ day of _____, 2016.

ATTEST:

CITY OF COLLEGE PARK, MARYLAND

_____
Janeen S. Miller, CMC
City Clerk

By: _____
Patrick L. Wojahn
Mayor

APPROVED AS TO FORM AND
LEGAL SUFFICIENCY

_____
Suellen M. Ferguson
City Attorney

Master Lease #3
EQUIPMENT GROUP

The cost of the Equipment Group to be funded by Lessee under this Lease is Two Million and 00/100 Dollars ($2,000,000) (the "Acquisition Cost"). The Equipment Group consists of replacements for the following vehicles, which has been or shall be purchased from Vendors to be selected, for the estimated prices set forth below. The City reserves the right to substitute vehicles on this list for comparable vehicles.

REPLACEMENTS FOR THE FOLLOWING VEHICLES:

Veh. No.	Vehicle Description	Estimated Cost	Estimated Acq. Date
	Medium Duty Trucks		
306	1990 GMC Top Kick Dump Truck	$ 200,000	Dec 2016
338	2000 International 4900/Galion Dump Truck	125,000	July 2017
339	2000 International 4900/Galion Dump Truck	125,000	July 2018
340	2000 International 4900/J&J Dump Truck	100,000	July 2018
	Subtotal	***550,000***	
	Heavy Duty Trucks		
327	1994 Ford/Pak-Mor 25yd Rear Loading Refuse Truck	290,000	May 2016
503	2008 Autocar/Labrie 32yd Automated Side Loading Refuse Truck	290,000	May 2016
328	1994 Ford/Pak-Mor 25yd Rear Loading Refuse Truck	290,000	May 2017
343	2001 Peterbilt/Leach 31yd Rear Loading Refuse Truck	290,000	May 2018
344	2002 Peterbilt/Leach 31yd Rear Loading Refuse Truck	290,000	May 2019
	Subtotal	***1,450,000***	
	Grand Total	***$ 2,000,000***	

The Equipment Group is or will be located at the following address

City of College Park, Public Works Facility
9219 51st Avenue
College Park, Maryland 20740

Prior to relocation of the Equipment Group or any portion thereof during the Lease Term, Lessee will provide written notice to SunTrust Equipment Finance & Leasing Corp.

16-G-71

Change Request for Public Works Modular Building

CITY OF COLLEGE PARK, MARYLAND
REGULAR COUNCIL MEETING AGENDA ITEM

AGENDA ITEM NUMBER 16-G-71

Prepared By: Robert T. Stumpff
Director of Public Works

Meeting Date: May 24, 2016

Presented By: Robert T. Stumpff

Consent Agenda: No

Originating Department: Public Works

Action Requested: Authorize the City Manager to sign Modular Genius Change Request Number 3 for MGI to purchase and install an emergency generator from Kohler Power Systems, Model 150REZGC, 208-600 volts natural gas generator in an amount not to exceed $200,000.

Strategic Plan Goal: Goal 6: Excellent Services

Background/Justification:
The Davis Hall administrative building has a diesel emergency generator that provides power for lights and outlets to allow phone services in the first floor department of Public Works administrative offices and lighting only in the first floor multipurpose meeting room. The generator is not large enough to power that HVAC system for the multipurpose room nor any offices/areas on the second floor. The former doublewide trailer serving the 40 staff members did not have any emergency generator capability. This proposal would authorize the removal of the present inadequate diesel emergency generator, then build a new concrete pad to accommodate a new fully adequate natural gas emergency generator that would provide emergency electrical services to the entire Davis Hall building – all floors, all spaces – and the new modular building.

DPW talked to J.E. Richards, electrical contractor, who is now doing most of the electrical work for the City to provide an estimated cost to install such a natural gas emergency generator. The estimate was in the range of $170,000, but they would have to work with Pepco to repower Davis Hall and the new modular building. This would have added a second charge from Pepco. Since MGI had to work with Pepco to disconnect power from the doublewide trailer, and install power to the new modular building through the Davis Hall building, it made sense to have MGI do this generator project and eliminate the coordination between two different electrical contractors and two different Pepco service orders.

Fiscal Impact:
The new modular building is being funded from the CIP account 015002, Public Works Facility Improvements which currently has a balance of $957,415. The modular building contract with MGI is for $722,445, leaving a balance of $234,970. It was estimated up front to have $200,000 set aside to include a new emergency generator that could accommodate both the new modular building and the entire Davis Hall. There is definitely enough money in the CIP account to cover this full cost.

Council Options:
#1: Authorize the approval of Change Request Number 3 to Modular Genius Inc.
#2: Not authorize Change Request Number 3
#3: Request additional information

Staff Recommendation:
#1

Recommended Motion:
I move that the City Council approve and authorize the City Manager to sign the Modular Genius Inc, Change Request Number 3 in an amount not to exceed $200,000.

Attachments:

1. MGI Change Request Number 3.

MODULAR GENIUS

SMART BUILDING

1201 S. Mountain Road
Joppa, MD 21085
Ph : 410-676-3424

Change Request

To: Bob Stumpff
City of College Park
9217 51st Ave
College Park, MD 20740

Number: 3
Date: 5/6/16
Job: 15-0267 City of College Park, MD - DPW
Phone:

Description: 150KV Generator Upgrade

MGI proposes the following for your review and approval:

Electrical Scope:
• Prepare Pepco service applications and coordinate work to be performed. (All Pepco fees associated with this work shall be paid by City of College Park)
• Obtain proper electrical permit for service and generator.
• Disconnect existing generator and perform selective demo to allow for removal of generator. Generator to be removed by others.
• Mortar patch exterior wall where generator conduits penetrated.
• Demo and dispose of fencing around existing electric service and HVAC unit to install new electric service.
• Install Pepco Duct Bank for new service.
• Perform mandrel test on conduits.
• Install new generator (Kohler Model: 150REZGC)
• Install free standing rack for new electric service equipment per Pepco hand book. Rack to include CT cabinet, Meter, troughs, 3 phase 800amp Service rated transfer switch and 3 phase 800amp MDP panel.
• Install underground conduits from transfer switch to generator for power and low voltage control wiring.
• Backfill, tamp, seed and straw disturbed area.
• Remove excess soils from sight.
• Core drill exterior wall for conduits feeding existing gear and install trough, conduit and wiring to re feed existing electric in building. Perform all terminations in MDP panel and trough for feeds to existing building.
• Perform demo of old service/conduits and mortar patch exterior wall where service conduit penetrated.
• Install conduit from new MDP panel to existing electric room to re feed existing gear.
• Install grounding system for new service.
• Pull feeder wires from CT cabinet to Transfer Switch and MDP panel.
• Perform terminations in Transfer Switch and MDP panel.
• Pull feeder and low voltage wires from Transfer Switch to Generator.
• Perform terminations in Transfer Switch and Generator.
• Schedule Pepco work with to connect new service and test for proper working order.
• Perform initial start-up of generator and customer demonstration. Perform load test with portable resistive load bank - assuming reasonable access.

Concrete Scope:
• Modify engineered site and foundation prints for installation of new side walks and generator pad. Sealed prints to be submitted to DPIE for project approval.
• Demo and remove existing sidewalk to install Pepco Duct Bank and relocation and resizing of generator.
• Remove existing generator pad and dispose.
• Install new concrete side walks as per attached plan for relocation and resizing of generator
• Install (1) new 5' x 9' concrete generator pad for relocation and resizing of generator
• Install (1) new 3' x 3' Concrete pad for upgraded gas main installation

Gas System Scope:
• Establish gas loads through final HVAC system information and existing loads. Obtain disposition from Washington Gas as to whether a 2 PSI system is available. All Washington gas fees shall be paid by City of College Park
• Install a new underground polyethylene gas line from existing meter location to the existing generator pad location, not to exceed 20' in distance from the meter
• Install riser clamps as necessary for the new gas line
• Pressure test the new gas line and obtain the required WSSC inspection
• Install new gas regulator for 2PSI system

1. ADD: Electrical demo and installation as per scope noted above $143,994.00

MODULAR GENIUS

SMART BUILDING

1201 S. Mountain Road
Joppa, MD 21085
Ph : 410-676-3424

2. ADD: Concrete demo and installation as per scope noted above $2,656.00
3. ADD: Gas System demo and installation as per scope noted above $5,400.00
4. ADD: MGI Project Management (24) Hrs. @ $90.00/Hr. - $2,160.00

Total Amount of Change Request #3. - $154,210.00

The Schedule will be impacted by (15) days.
MGI Requests response to Change Request #3 by Monday, May 9, 2016

The total amount to provide this work is $154,210.00

Please note that Modular Genius will require an extra 15 Days.

If you have any questions, please contact me at 410-676-3424.

Submitted by: Rob Horlacher
Modular Genius, Inc.

Approved by: _____
Date: _____

Cc:

Model: 150REZGC

KOHLER POWER SYSTEMS

208-600 V **Gas**

ISO 9001 KOHLER POWER SYSTEMS NATIONALLY REGISTERED

EPA-Certified for Stationary Emergency Applications

Ratings Range

		60 Hz
Standby:	**kW**	106-150
	kVA	106-188

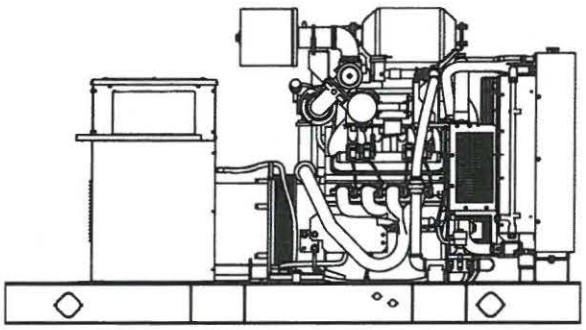

Standard Features

- Kohler Co. provides one-source responsibility for the generating system and accessories.
- The generator set and its components are prototype-tested, factory-built, and production-tested.
- The 60 Hz generator set offers a UL 2200 listing.
- At 60 Hz, the generator set accepts rated load in one step.
- The 60 Hz generator set meets NFPA 110, Level 1, when equipped with the necessary accessories and installed per NFPA standards.
- A one-year limited warranty covers all systems and components. Two- and five-year extended warranties are also available.
- Alternator features:
  - The unique Fast-Response™ X excitation system delivers excellent voltage response and short-circuit capability using a rare-earth, permanent magnet (PM)-excited alternator.
  - The brushless, rotating-field alternator has broadrange reconnectability.
- Other features:
  - Kohler designed controllers for guaranteed system integration and remote communication. See Controllers on page 3.
  - The electronic, isochronous governor incorporates an integrated drive-by-wire throttle body actuator delivering precise frequency regulation.

Generator Set Ratings

				Natural Gas 130°C Rise Standby Rating		LP Gas 130°C Rise Standby Rating	
Alternator	**Voltage**	**Ph**	**Hz**	**kW/kVA**	**Amps**	**kW/kVA**	**Amps**
4R13X	120/208	3	60	137/171	475	137/171	475
	127/220	3	60	143/179	469	137/171	449
	120/240	3	60	137/171	412	137/171	412
	120/240	1	60	107/107	446	107/107	446
	139/240	3	60	150/188	454	137/171	412
	220/380	3	60	124/155	235	124/155	234
	277/480	3	60	150/188	226	137/171	206
4S12X	120/208	3	60	150/188	520	137/171	475
	127/220	3	60	150/188	492	137/171	449
	120/240	3	60	150/188	451	137/171	412
	120/240	1	60	106/106	442	106/106	442
	139/240	3	60	150/188	451	137/171	412
	220/380	3	60	140/175	266	137/171	260
	277/480	3	60	150/188	226	137/171	206
	347/600	3	60	150/188	180	137/171	164
4S13X	120/208	3	60	150/188	520	139/174	482
	127/220	3	60	150/188	492	139/174	456
	120/240	3	60	150/188	451	139/174	418
	120/240	1	60	113/113	471	113/113	471
	139/240	3	60	150/188	451	139/174	418
	220/380	3	60	150/188	285	139/174	264
	277/480	3	60	150/188	226	139/174	209
	347/600	3	60	150/188	180	139/174	167
4T13X	120/240	1	60	144/144	600	134/134	557

RATINGS: All three-phase units are rated at 0.8 power factor. All single-phase units are rated at 1.0 power factor. *Standby Ratings:* The standby rating is applicable to varying loads for the duration of a power outage. There is no overload capability for this rating. *Prime Power Ratings:* At varying load, the number of generator set operating hours is unlimited. A 10% overload capacity is available for one hour in twelve. Ratings are in accordance with ISO-8528-1 and ISO-3046-1. For limited running time and continuous ratings, consult the factory. Obtain technical information bulletin (TIB-101) for ratings guidelines, complete ratings definitions, and site condition derates. The generator set manufacturer reserves the right to change the design or specifications without notice and without any obligation or liability whatsoever. For dual fuel engines, use the LP gas ratings for both the primary and secondary fuels.

Alternator Specifications

Specifications	Alternator
Manufacturer	Kohler
Type	4-Pole, Rotating-Field
Exciter type	Brushless, Rare-Earth Permanent Magnet
Leads: quantity, type	
4RX, 4SX	12, Reconnectable
4TX	4, 110-120/220-240
Voltage regulator	Solid State, Volts/Hz
Insulation:	NEMA MG1
Material	Class H
Temperature rise	130°C, Standby
Bearing: quantity, type	1, Sealed
Coupling	Flexible Disc
Amortisseur windings	Full
Voltage regulation, no-load to full-load	Controller Dependent
One-step load acceptance	100% of Rating
Unbalanced load capability	100% of Rated Standby Current
Peak motor starting kVA:	(35% dip for voltages below)
480 V 4R13X (12 lead)	540 (60 Hz)
480 V 4S12X (12 lead)	480 (60 Hz)
480 V 4S13X (12 lead)	570 (60 Hz)
240 V 4T13X (4 lead)	440 (60 Hz)

- NEMA MG1, IEEE, and ANSI standards compliance for temperature rise and motor starting.
- Sustained short-circuit current of up to 300% of the rated current for up to 10 seconds.
- Sustained short-circuit current enabling downstream circuit breakers to trip without collapsing the alternator field.
- Self-ventilated and dripproof construction.
- Vacuum-impregnated windings with fungus-resistant epoxy varnish for dependability and long life.
- Superior voltage waveform from a two-thirds pitch stator and skewed rotor.

Application Data

Engine

Engine Specifications	
Manufacturer	PSI
Engine: model, type	Industrial, 8.8 L, 4-Cycle, Turbocharged and Charge Cooled
Cylinder arrangement	V-8
Displacement, L (cu. in.)	8.8 (537)
Bore and stroke, mm (in.)	110 x 114 (4.35 x 4.5)
Compression ratio	10.1:1
Piston speed, m/min. (ft./min.)	411 (1350)
Main bearings: quantity, type	5, Bi-Metal Steel and Aluminum
Rated rpm	1800
Max. power at rated rpm (NG), kW (HP)	193 (259)
Max. power at rated rpm (LPG), kW (HP)	169 (227)
Cylinder head material	Cast Iron
Piston type and material	Flat Top, Hypereutectic Cast Alum.
Crankshaft material	Forged Steel, Induction Hardened, Tangential Fillet
Valve (exhaust) material	Int.-A193 Exh. Inconel
Governor type	Electronic
Frequency regulation, no-load to full-load	Isochronous
Frequency regulation, steady state	±0.5%
Frequency	Fixed
Air cleaner type, all models	Dry

Exhaust

Exhaust System	
Exhaust manifold type	Dry
Exhaust flow at rated kW, m^3/min. (cfm)	27.5 (971)
Exhaust temperature at rated kW, dry exhaust, °C (°F)	649 (1200)
Maximum allowable back pressure, kPa (in. Hg)	10.2 (3.0)
Exhaust outlet size at engine hookup, mm (in.)	Flanged Outlet at Catalyst see ADV drawing

Engine Electrical

Engine Electrical System	
Ignition system	Individual Coil Near Plug Ignition
Battery charging alternator:	
Ground (negative/positive)	Negative
Volts (DC)	12
Ampere rating	70
Starter motor rated voltage (DC)	12
Battery, recommended cold cranking amps (CCA):	
Qty., rating for -18°C (0°F)	1, 630
Battery voltage (DC)	12

Fuel

Fuel System	
Fuel type	Natural Gas, LP Gas, or Dual Fuel
Fuel supply line inlet	1.5 NPTF
Natural gas fuel supply pressure, kPa (in. H_2O)	1.74-2.74 (7-11)
LPG vapor withdrawal fuel supply pressure, kPa (in. H_2O)	1.24-2.74 (5-11)
Dual fuel engine, LPG vapor withdrawal fuel supply pressure, kPa (in. H_2O)	1.24 (5)

Fuel Composition Limits *	Nat. Gas	LP Gas
Methane, % by volume	90 min.	1.2 max.
Ethane, % by volume	4.0 max.	10 max.
Propane, % by volume	1.0 max.	96 max.
Propene, % by volume	0.1 max.	3 max.
C_4 and higher, % by volume	0.3 max.	3 max.
Sulfur, ppm mass	25 max.	
Lower heating value, MJ/m^3 (Btu/ft^3), min.	33.2 (890)	78.8 (2116)

* Fuels with other compositions may be acceptable. If your fuel is outside the listed specifications, contact your local distributor for further analysis and advice.

Application Data

Lubrication

Lubricating System	
Type	Full Pressure
Oil pan capacity, L (qt.)	8.0 (8.5)
Oil pan capacity with filter, L (qt.)	8.5 (9.0)
Oil filter: quantity, type	1, Cartridge

Cooling

Radiator System	
Ambient temperature, °C (°F) *	50 (122)
Engine jacket water capacity, L (gal.)	13.4 (3.54)
Radiator system capacity, including engine, L (gal.)	25.5 (5.61)
Engine jacket water flow, Lpm (gpm)	125 (33)
Heat rejected to cooling water at rated kW, dry exhaust, kW (Btu/min.)	88.2 (5021)
Heat rejected to charge cooling air at rated kW, dry exhaust, kW (Btu/min.)	11.3 (642)
Heat rejected to engine oil at rated kW, dry exhaust, kW (Btu/min.)	1.4 (81)
Water pump type	Centrifugal
Fan diameter, including blades, mm (in.)	711 (28.0)
Fan, kWm (HP)	18.7 (25)
Max. restriction of cooling air, intake and discharge side of radiator, kPa (in. H_2O)	0.125 (0.5)

* Enclosure with enclosed silencer reduces ambient temperature capability by 5°C (9°F).

Operation Requirements

Air Requirements	
Radiator-cooled cooling air, m^3/min. (scfm) †	340 (12000)
Combustion air, m^3/min. (cfm)	8.9 (314)
Heat rejected to ambient air:	
Engine, kW (Btu/min.)	24.9 (1476)
Alternator, kW (Btu/min.)	15.7 (893)

† Air density = 1.20 kg/m^3 (0.075 lbm/ft^3)

Fuel Consumption ‡		
Natural Gas, m^3/hr. (cfh) at % load	**Standby Ratings**	
100%	55.7	(1965)
75%	43.3	(1529)
50%	31.2	(1102)
25%	19.5	(688)
0%	8.1	(286)
LP Gas, m^3/hr. (cfh) at % load	**Standby Ratings**	
100%	20.2	(713)
75%	15.5	(547)
50%	11.3	(399)
25%	7.2	(254)
0%	4.6	(164)

‡ Nominal fuel rating: Natural gas, 37 MJ/m^3 (1000 Btu/$ft.^3$)
LP vapor, 93 MJ/m^3 (2500 Btu/$ft.^3$)

LP vapor conversion factors:
8.58 $ft.^3$ = 1 lb.
0.535 m^3 = 1 kg.
36.39 $ft.^3$ = 1 gal.

Controllers

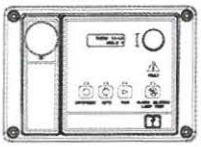

Decision-Maker® 3000 Controller
Provides advanced control, system monitoring, and system diagnostics for optimum performance and compatibility.
- Digital display and menu control provide easy local data access
- Measurements are selectable in metric or English units
- Remote communication thru a PC via network or serial configuration
- Controller supports Modbus® protocol
- Integrated hybrid voltage regulator with ±0.5% regulation
- Built-in alternator thermal overload protection
- NFPA 110 Level 1 capability

Refer to G6-100 for additional controller features and accessories.

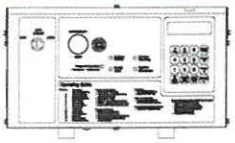

Decision-Maker® 550 Controller
Provides advanced control, system monitoring, and system diagnostics with remote monitoring capabilities.
- Digital display and keypad provide easy local data access
- Measurements are selectable in metric or English units
- Remote communication thru a PC via network or modem configuration
- Controller supports Modbus® protocol
- Integrated voltage regulator with ±0.25% regulation
- Built-in alternator thermal overload protection
- NFPA 110 Level 1 capability

Refer to G6-46 for additional controller features and accessories.

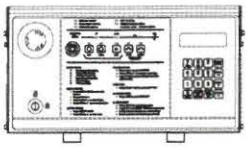

Decision-Maker® 6000 Paralleling Controller
Provides advanced control, system monitoring, and system diagnostics with remote monitoring capabilities for paralleling multiple generator sets.
- Paralleling capability with first-on logic, synchronizer, kW and kVAR load sharing, and protective relays
- Digital display and keypad provide easy local data access
- Measurements are selectable in metric or English units
- Remote communication thru a PC via network or modem configuration
- Controller supports Modbus® protocol
- Integrated voltage regulator with ±0.25% regulation
- Built-in alternator thermal overload protection
- NFPA 110 Level 1 capability

Refer to G6-107 for additional controller features and accessories.

KOHLER CO., Kohler, Wisconsin 53044 USA
Phone 920-457-4441, Fax 920-459-1646
For the nearest sales and service outlet in the
US and Canada, phone 1-800-544-2444
KohlerPower.com

Kohler Power Systems
Asia Pacific Headquarters
7 Jurong Pier Road
Singapore 619159
Phone (65) 6264-6422, Fax (65) 6264-6455

Standard Features

- Alternator Protection
- Battery Rack and Cables
- Customer Connection
  (Standard with Decision-Maker® 6000 controller only)
- Electronic, Isochronous Governor
- Gas Fuel System (includes fuel mixer, electronic secondary gas regulator, gas solenoid valve, and flexible fuel line between the engine and the skid-mounted fuel system components)
- Integral Vibration Isolation
- Local Emergency Stop Switch
- Oil Drain Extension
- Operation and Installation Literature
- Three-Way Exhaust Catalyst

Available Options

Approvals and Listings

- ☐ CSA Approval
- ☐ IBC Seismic Certification
- X UL 2200 Listing

Enclosed Unit

- ☐ Sound Enclosure (with enclosed critical silencer)
- X Weather Enclosure (with enclosed critical silencer)

Open Unit

- ☐ Exhaust Silencer, Critical (kit: PA-324470)
- ☐ Flexible Exhaust Connector, Stainless Steel

Fuel System

- ☐ Dual Fuel NG/LPG (automatic changeover)
- ☐ Flexible Fuel Line
  (required when the generator set skid is spring mounted)
- ☐ Gas Filter
- ☐ LP Liquid Withdrawal (vaporizer)
- ☐ Secondary Gas Solenoid Valve

Controller

- ☐ Common Fault Relay
- ☐ Communication Products and PC Software
- ☐ Customer Connection
  (Decision-Maker® 550 and 6000 controllers only)
- ☐ Dry Contact (isolated alarm)
  (Decision-Maker® 550 and 6000 controllers only)
- X Input/Output Module (Decision-Maker® 3000 controller only)
- ☐ Remote Annunciator Panel
- ☐ Remote Audiovisual Alarm Panel
  (Decision-Maker® 550 and 6000 controllers only)
- ☐ Remote Emergency Stop
- ☐ Run Relay

Cooling System

- X Block Heater, 1800 W, 110-120 V
- ☐ Block Heater, 2000 W, 190-240 V
  [recommended for ambient temperatures below 10°C (50°F)]
- ☐ Radiator Duct Flange

Electrical System

- ☐ Alternator Strip Heater
- ☐ Battery
- ☐ Battery Charger, Equalize/Float Type
- ☐ Battery Heater
- X Line Circuit Breaker (NEMA1 enclosure)
- ☐ Line Circuit Breaker with Shunt Trip (NEMA1 enclosure)

Miscellaneous

- ☐ Air Cleaner Restrictor Indicator
- X Certified Test Report
- X Engine Fluids Added
- X Rated Power Factor Testing
- ☐ Rodent Guards

Literature

- X General Maintenance
- ☐ NFPA 110
- ☐ Overhaul
- X Production

Warranty

- ☐ 2-Year Basic
- X 5-Year Basic
- ☐ 5-Year Comprehensive

Other Options

- ☐ _____
- ☐ _____
- ☐ _____
- ☐ _____
- ☐ _____
- ☐ _____
- ☐ _____
- ☐ _____

Dimensions and Weights

Overall Size, L x W x H, mm (in.):	2800 x 1120 x 1538 (110.2 x 44.1 x 60.6)
Weight (radiator model), wet, kg (lb.):	1440 (3175)

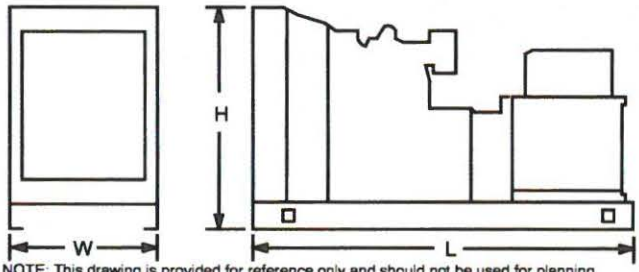

NOTE: This drawing is provided for reference only and should not be used for planning installation. Contact your local distributor for more detailed information.

DISTRIBUTED BY:

© 2012 by Kohler Co. All rights reserved.

16-G-72

Pride Flag

CITY OF COLLEGE PARK, MARYLAND
REGULAR COUNCIL MEETING AGENDA ITEM

AGENDA ITEM NUMBER 16-G-72

Prepared By: Janeen S. Miller, City Clerk **Meeting Date:** May 24, 2016

Presented By: Councilmember Stullich **Consent Agenda:** No

Originating Department: City Council

Action Requested: Decision on the request to display the Pride flag as a banner on the front of City Hall from June 6 – 13, 2016

Strategic Plan Goal: Goal 1: One College Park

Background/Justification:
At the May 17 Worksession, Councilmember Brennan asked Council to consider raising the Pride Flag at City Hall for one week in June. Due to flag protocol and logistical issues with the City Hall flag poles, the suggestion was made to hang the Pride flag as a banner on the front of the building, below the City Hall sign. Council is asked to take action on this request.

Fiscal Impact:
None

Council Options:
#1: Approve the request
#2: Deny the request

Staff Recommendation:
N/A

Recommended Motion:
I move to approve the display of the Pride Flag as a banner on the front of City Hall from June 6 – 13, 2016.

Attachments:
None.

16-G-74

Development Consultant

(Material will be provided prior to the meeting)

16-G-73

Appointments to Boards and Committees

Appointments to Boards and Committees **16-G-73**

<u>Councilmember Stullich:</u>

- Appoint Stuart Adams to the Recreation Board

<u>Councilmember Kujawa:</u>

- Reappoint Judith Oarr to the Recreation Board

Possible Additions to the May 24, 2016 agenda:

1. Support for County Urban Agriculture Legislation

2. Request from Junior Tennis Champions Center for funding

COUNTY COUNCIL OF PRINCE GEORGE'S COUNTY, MARYLAND
SITTING AS THE DISTRICT COUNCIL
2016 Legislative Session

Bill No. CB- -2016

Chapter No.

Proposed and Presented by Council Members Lehman and Glaros

Introduced by

Co-Sponsors

Date of Introduction

ZONING BILL

AN ORDINANCE concerning

Urban Farms

For the purpose of amending the definition and zoning categories for Urban Farms

BY repealing and reenacting with amendments:

Sections 27-107.01 and 27-441,
The Zoning Ordinance of Prince George's County, Maryland,
being also
SUBTITLE 27. ZONING.
The Prince George's County Code
(2011 Edition; 2014 Supplement).

SECTION 1. BE IT ENACTED by the County Council of Prince George's County, Maryland, sitting as the District Council for that part of the Maryland-Washington Regional District in Prince George's County, Maryland, that Sections 27-107.01 and 27-441 of the Zoning Ordinance of Prince George's County, Maryland, being also Subtitle 27 of the Prince George's County Code, be and the same are hereby repealed and reenacted with the following amendments:

SUBTITLE 27. ZONING.

PART 2. GENERAL.

DIVISION 1. DEFINITIONS.

Sec. 27-107.01. Definitions.

* * * * * * * * *

(243.8) **Urban Farm:** A use that permits [a non-profit organization] an organization or individual to cultivate fruits, vegetables, flowers, that permits composting, beekeeping, agricultural education and incidental sales on the property, and excludes livestock. However, a Health Department permit is required if fruits and vegetables are cut up or prepared foods are sold to the public. The organization or individual operating an urban farm shall be a cooperator with the Prince George's Soil Conservation District, and operate under an approved Farm Management Plan. Accessory structures ordinarily found in association with an Urban Farm are permitted. The appearance and scale of all accessory structures shall be in compliance with the existing requirements of the zone. Off-street parking and loading requirements in Part II and Landscape Manual regulations do not apply to an Urban Farm.

* * * * * * * * *

SUBTITLE 27. ZONING.

PART 5. GENERAL.

DIVISION 3. USES PERMITTED

Sec. 27-441. Uses permitted.

(b) TABLE OF USES.

	ZONE								
USE	**R-O-S**	**O-S**	**R-A**	**R-E**	**R-R**	**R-80**	**R-55**	**R-35**	**R-20**
(7) Resource Production/Recovery:									
* * * * * * *	*	*	*	*	*	*	*	*	*
(F) Urban Farm	[X]P	[X]P	[X]P	[X]P	[X]P	[X]P[109]	[X]P[109]	X	X
* * * * * * *	*	*	*	*	*	*	*	*	*

USE	ZONE							
	R-T	R-30	R-30C	R-18	R-18C	R-10A	R-10	R-H
(1) COMMERCIAL:								
(7) Resource Production/Recovery:								
* * * * * * * *	*	*	*	*	*	*	*	*
(F) Urban Farm	X	X	X	P[97]	X	X	X	X
* * * * * * * *	*	*	*	*	*	*	*	*

*	* * * * * * * * * * * * * * * * * * * *
97	Permitted use only where a municipality indicates approval to operate such use on the property, and the extent of the use on the property does not exceed a maximum of five (5) acres in size. The Urban Farm shall not allow noxious odors or dust to drift off the premises. The applicant shall be required to obtain a Health Department permit if fruits and vegetables are cut up or prepared foods are being sold to the public. [The Urban Farm will not be subject to the sections of Subtitle 27 as listed below or the Landscape Manual:
	(A) Exempt from the Landscape Manual regulations;
	(B) Exempt from Part 11, the parking and loading requirements; <u>and</u>
	(C) Accessory structures are permitted; and
	(D)] Signage shall be limited to way finding and directional signs<u>.</u>
*	* * * * * * * * * * * * * * * * * * * *
<u>109</u>	<u>Provided:</u>
	<u>(A) If the subject property is within a municipality, the use is only permitted if the municipality has indicated approval through a letter or resolution;</u>

(B) The use shall not cause noxious odors or dust to drift off the premises;
(C) Onsite signage shall be limited to one identification sign not exceeding sixty (60) square inches in area. Interpretative signs educating attendees about urban farming are allowed on the property.
(D) The use must be maintained in an orderly manner, including litter removal, irrigation, pest control, and removal of dead or diseased plant materials. All garbage must be removed from the site weekly.
(E) Garbage and compost receptacles at an urban farm shall be screened from the street and adjacent properties by utilizing landscaping, fencing, or storage within structures;
(F) The use shall be required to obtain all necessary permits as applicable, including for accessory structures and signage, and
(G) Notwithstanding Section 27-107.01 (243.8), incidental sales are not permitted onsite; however, customers subscribed to a Community Supported Agriculture (CSA) program managed by the farm are allowed to pick up their weekly share of produce from the urban farm property.

SECTION 2. BE IT FURTHER ENACTED that this Ordinance shall take effect forty-five (45) calendar days after its adoption.

Adopted this _____ day of _____ , 2015.

COUNTY COUNCIL OF PRINCE GEORGE'S COUNTY, MARYLAND, SITTING AS THE DISTRICT COUNCIL FOR THAT PART OF THE MARYLAND-WASHINGTON REGIONAL DISTRICT IN PRINCE GEORGE'S COUNTY, MARYLAND

BY: _____
Derrick Leon Davis
Chairman

ATTEST:

_____
Redis C. Floyd
Clerk of the Council

KEY:
Underscoring indicates language added to existing law.
[Brackets] indicate language deleted from existing law.
Asterisks *** indicate intervening existing Code provisions that remain unchanged.

CB-25-2016: Promoting Urban Agriculture in Prince George's County

Prince George's County currently offers a tax credit for urban farming, but the county's zoning code doesn't permit urban farming in residential zones, even though general agriculture (rural farming) is already permitted in some of the larger residential zones. By broadening the definition of an urban farm to allow any organization or individual to participate in urban farming, and permitting urban agriculture in a limited number of residential zones, this legislation would enable more urban farmers to access the county's tax credit. This financial incentive can be critical to urban farmers in their startup years.

The legislation also expands urban farming opportunities into the R-80 and R-55 residential zones under strict criteria, further ensuring access to fresh food and the land to grow it is available directly in our communities.

Benefits to Prince George's County

Food access: 1 in 6 Prince Georgians lack proper access to enough nutritious food, leading to high rates of diabetes, obesity, and heart disease. The US Department of Agriculture has declared parts of Prince George's County a food desert. Urban agriculture is an important tool to providing farm fresh foods in underserved neighborhoods, and helps promote healthy eating.

Economic Development: Every new urban farm created can be thought of as adding new small business to the county's economy. These farms generate income for farmers, create local jobs for Prince George's County residents, and generate tax revenue for local government.

Environmental Benefits: Urban farming eliminates long-distance transportation of food, reducing energy consumption and its associated negative air quality impacts. Further, it can help preserve green spaces from development by ensuring they are economically productive.

Education and Community Building: Engagement in food production empowers residents who grow food for themselves, and brings communities closer together. This can help revitalize neighborhoods, teach our youth entrepreneurial skills, and provide for greater awareness of the health and environmental benefits of local food.

Ensuring Quality Farms

Recognizing that urban farming must be of high quality to thrive in residential communities, CB-25 requires all urban farms to cooperate with the Prince George's Soil Conservation District and operate under an approved farm management plan. This provision helps ensure farmers will be successful while minimizing the potential for any public nuisance. If the property is within a municipality, a letter of support from the municipality is required.

In addition to a farm management plan and municipal support, there are requirements that a farm be properly maintained, including litter removal, irrigation, pest control, and compliance with the county code for any permits or accessory structures onsite. Finally, urban farms cannot have livestock or chickens, a necessary compromise to prevent complaints from neighbors.

Proposal for Partnership between Junior Tennis Champions Center and the City of College Park

The Junior Tennis Champions Center (JTCC), a nonprofit organization located in College Park, seeks to establish a partnership to increase community tennis participation in College Park. Tennis is a wonderful vehicle to bring the community together and encourage healthy interaction. Tennis is a sport for all ages and levels of ability, and provides a good physical workout.

JTCC is a 501(c)(3) nonprofit organization, committed to transforming people's lives through tennis by offering a comprehensive pathway for all players. JTCC's mission is to grow the game at every level and create a lifetime sport for all people.

JTCC was selected by the United States Tennis Association (USTA) as the first Regional Training Center for its high performance program, and JTCC's facility was selected as 2013 USTA Facility of the Year. JTCC is proud to be considered the premier tennis facility in the metropolitan area, offering a 32-court tennis facility featuring indoor, outdoor, hard, red and green clay courts. The club is equipped with a complete fitness complex, including a speed and agility center and yoga studio, with personal trainers on site.

As a partner of JTCC, the City of College Park will receive benefits outlined below:

JTCC will provide to College Park Residents:

Community Tennis Involvement

- Five free group lessons for adults and juniors.
- 25% off membership dues.
- 25% off of paid lessons following the five free group lessons.
- Free instruction to students in elementary schools in College Park.

- Will continue to support The College Park City-University Partnership ("CPCUP") Home Ownership Program by offering a free six month membership to participants.
- Each year JTCC hosts a **free** Tennis Festival that is open to children ages 5 to 12 of all skill levels. The event is held annually in May. No tennis experience necessary and the festival is held rain or shine. All participants receive one free day of summer camp, and twenty five of the most promising players will receive two free weeks of summer camp at JTCC. College Park residents should sign up at http://www.jtcc.org/events/festival/ or email festival@jtcc.org for more information.
- JTCC will host family tennis festivals six times a year for only College Park residents. Each festival will take place on a weekend for two hours.

Signage

- Signage at College Park Tennis Club year round
- Extra signage during the annual Tennis Festival event
- Name/logo identification in club marketing material
- Yearly Corporate Club Membership for City Council and City Management

Term

The proposed term of this agreement is one year commencing on July 15, 2016 and ending on May 31, 2017 with the intention to extend if both parties are satisfied with the relationship.

The City of College Park will provide:

In consideration of the benefits listed above, the City of College Park will make a contribution of $10,000 to JTCC. The contribution is due in two equal installments on or before July 15, 2016 and January 15, 2017.