TUESDAY, OCTOBER 18, 2016
CITY OF COLLEGE PARK
COUNCIL CHAMBERS

WORKSESSION AGENDA
7:30 P.M.

COLLEGE PARK MISSION STATEMENT

The City Of College Park Provides Open And Effective Governance And Excellent Services That Enhance The Quality Of Life In Our Community.

Time		Item	Staff/Council
7:30		CALL TO ORDER	
		CITY MANAGER'S REPORT	
		AMENDMENTS TO AND APPROVAL OF THE AGENDA	
Discussion Items			
7:35	1	Request by the College Park Ethics Commission for an amendment to Chapter 38 of the City Code Guests: Joe Theis, Chair, and Ken Sigman, Counsel, College Park Ethics Commission (15)	Janeen S. Miller City Clerk
7:50	2	***Special Session (16-G-122):*** Motion to support the application for a new Class B (BLX) Beer, Wine and Liquor License for the use of Milkboy College Park, LLC t/a Milkboy & Arthouse, subject to the applicant entering into a Property Use Agreement (PUA) with the City in substantially the form attached; authorize the City Manager to sign the PUA; and authorize staff to testify to the City's position at the BOLC hearing (15)	Suellen Ferguson, City Attorney
8:05	3	Proposed amendments to the Fence Ordinance and discussion about the APC's suggestion that the City provide financial incentives to residents to promote the use of fence materials other than chain link (20)	Suellen Ferguson, City Attorney

8:25	4	Update from the College Park City University Partnership (25)	Eric Olson, Executive Director, CPCUP
8:50	5	Detailed Site Plan for EZ Storage, 5151 Branchville Road (15)	Miriam Bader, Senior Planner
9:05	6	***Special Session (16-G-130)***: Approval of a City Position that an applicant shall not use City occupancy permits to justify an increase in density on 4210, 4212, 4214, and 4216 Knox Road (15)	Suellen Ferguson, City Attorney
9:20	7	Discussion of a policy change regarding the 48-hour prohibited parking rule (follow up from June 7 W/S) (15)	Suellen Ferguson, Bob Ryan and Jim Miller
9:35	8	Discussion of honorary status for certain Board/Committee members (5)	Janeen S. Miller City Clerk
9:40	9	FY ’18 M-NCPPC Budget Requests (15)	Bill Gardiner, Assistant City Manager
9:55	10	Discussion of a letter to Chief Bashoor about career staffing at the Branchville Volunteer Fire Department (10)	Mayor and Council
10:05	11	Agenda items for October 26 Four Cities Meeting in Greenbelt (5)	Mayor and Council
10:10	12	Requests For/Status of Future Agenda items (5)	Mayor and Council
10:15	13	Appointments to Boards and Committees (5)	Mayor and Council
10:20	14	Mayor and Councilmember Comments (5)	Mayor and Council
10:25	15	City Manager's Comments (5)	Scott Somers, City Manager

This agenda is subject to change. Item times are estimates only. For the most current information, please contact the City Clerk. In accordance with the Americans with Disabilities Act, if you need special assistance, please contact the City Clerk’s Office and describe the assistance that is necessary. City Clerk’s Office: 240-487-3501

1

Proposed amendment to City Code Chapter 38, Ethics

CITY OF COLLEGE PARK, MARYLAND
WORKSESSION AGENDA ITEM

Prepared By: Janeen S. Miller
City Clerk

Meeting Date: 10/18/2016

Presented By: Janeen S. Miller

Proposed Consent Agenda: No

Originating Department: College Park Ethics Commission

Issue Before Council: Consider a request from the Ethics Commission for an amendment to Chapter 38 Ethics of the City Code by adding the definition of "immediate family".

Strategic Plan Goal: Goal 5 - Effective Leadership

Background/Justification:
On September 7, 2016, the College Park Ethics Commission sent the attached Memorandum to the Mayor and Council proposing an amendment in Chapter 38 of the City Code by adding the following definition of "Immediate Family: An individual's spouse, domestic partner, and dependent children."

Joe Theis, Chair, and Ken Sigman, Legal Counsel, of the Ethics Commission, have been invited to the October 18 Worksession to discuss this request with the Mayor and Council.

Fiscal Impact:
Minor cost to amend the City Code.

Council Options:
#1: Direct staff to draft an Ordinance to make the requested change
#2: Discuss other matters with the Ethics Commission
#3: Take no action at this time

Staff Recommendation:
#1

Recommended Motion:
No motion required; Council may direct staff.

Attachments
1 – Memo from the College Park Ethics Commission

Susan Silber
Linda S. Perlman
Kenneth T. Sigman
Metody A. Tilev*
Miriam H. Sievers**
* Also admitted in Virginia
** Admitted in Maryland only

SILBER, PERLMAN, SIGMAN & TILEV, P.A.

ATTORNEYS AT LAW

Practicing in Maryland and the District of Columbia

sigman @sp-law.com

6930 Carroll Avenue, Suite 610 ■ Takoma Park, Maryland 20912 ■ Tel: (301) 891-2200 ■ Fax: (301) 891-2206 ■ Web: www.sp-law.com

MEMORANDUM

To: College Park Mayor and City Council

From: Kenneth Sigman, Ethics Counsel

Cc: Ethics Commission; Suellen Ferguson, City Attorney

Via: Janeen Miller, City Clerk

Subject: Proposed Code amendment adding definition of "immediate family"

Date: September 7, 2016

The purpose of this memorandum is to request, on behalf of the Ethics Commission, an amendment to the Ethics Chapter of the College Park Code.

The proposed amendment is the addition of a definition of "immediate family" to the Ethics Chapter. Currently, the Ethics Chapter uses the term "immediate family" in several paragraphs of section 38-15, which prescribes financial disclosure requirements. Without a definition of immediate family, it is unclear for which relatives City officials must disclose financial information in their financial disclosure statements. The State ethics law, upon which the City's Ethics Chapter is based, defines "immediate family" as "an individual's spouse and dependent children." This definition is considerably narrower than the Ethics Chapter's definition of "family member," which provides as follows:

> Anyone who is related to an individual by blood, marriage or adoption or is a member of an individual's household. Family members include but are not limited to an individual's spouse, domestic partner, parent, sibling, child, cousin, mother-in-law, father-in-law, grandparent, grandchild or anyone who is a member of the individual's household.

The purpose of the State Code's use of "immediate family" in the financial disclosure provisions is to avoid requiring government officials to disclose personal financial information of family members that the official has no legal right to access.

Accordingly, the Commission requests that the City Council add the following provision to the definitions section of the Ethics Chapter of the College Park Code:

Immediate Family

An individual's spouse, domestic partner, and dependent children.

2

Special Session (16-G-122)

Milkboy+Arthouse Property Use Agreement

CITY OF COLLEGE PARK, MARYLAND
COUNCIL MEETING AGENDA ITEM

AGENDA ITEM NUMBER 16-G-122

Prepared By: R.W. Ryan
Public Services Director

Meeting Date: October 16, 2016

Presented By: R.W. Ryan
Public Services Director and
Suellen Ferguson, City Attorney

Consent Agenda: No

Originating Department:	Public Services Department
Action Requested:	Approval of, or no opposition to, the issuance of a new Class B (BLX), Beer, Wine and Liquor License for the use of Milkboy College Park, LLC, t/a MilkBoy + Arthouse, subject to the applicant entering into a Property Use Agreement (PUA) with the City.
Strategic Plan Goal:	Goal 3: High Quality Development and Reinvestment

Background/Justification:
The City Attorney and Director of Public Services met with Ms. Linda Carter, Attorney, and her client, Mr. James Lokoff, to discuss a Property Use Agreement (PUA) and a proposed business plan. The applicant is planning to operate a restaurant and entertainment venue in the newly renovated building at 7416 Baltimore Avenue. They have entered into a joint venture with the UMD Clarice Smith Performing Arts Center, "The Clarice". They have agreed to comply with the Prince George's County Board of License Commissioners (BOLC) requirement to invest at least $1,000,000 in improvements to qualify for the Class B (BLX) non-competitive license. On the basis of the meeting, the City Attorney drafted a proposed PUA. At the Worksession, which was attended by all of the authorized members for Milkboy, the applicant requested certain changes in the draft PUA.

Food service will be provided. A menu is attached. Food will be served at all times that alcoholic beverages are served.

Entertainment will be provided. The Clarice is anticipated to book performances several times a month. MilkBoy will book entertainment at other times. This will require an entertainment permit and security plan approved by PGPD. The security plan is a requirement of the PUA.

Renovations anticipated include a Baltimore Avenue façade which includes two stories of glass garage door style openings. Interior renovations include a bar/restaurant area on the ground floor in front, a restaurant/entertainment area on the ground floor in back, and a large entertainment venue on the second floor.

The City Attorney and the applicants have continued discussions of the requested changes after the Worksession. The attached draft PUA reflects direction given by the Council and subsequent changes to the original draft to accommodate the applicant's business plan. There are unique characteristics of the proposed venue which make it different from other establishments in the City. For example, there are sections of this venue which will be used at times for performances before a stand up audience, without the sale of food in that area, and for gallery space for art shows, which may also involve alcohol service. With the participation of The Clarice, and the creation of a true entertainment venue that will be an amenity for the downtown area, a focus different from the standard restaurant is planned. Because of these unique circumstances, the Council is willing to forego a food to alcohol ratio and make other changes to the PUA. The revised PUA was provided to counsel for the applicants on October 7, 2016, but we have not received any response. Ms. Carter has been notified that this matter is on the Mayor and Council agenda for October 18.

Fiscal Impact: MilkBoy & Arthouse is anticipated to provide a destination restaurant/entertainment/gallery venue downtown.
Council Options: #1: Approve the draft PUA as proposed and support, or not oppose, the new Class B (BLX, Beer, Wine and Liquor License. #2: Approve the draft PUA with changes and support, or not oppose, the new Class B (BLX, Beer, Wine and Liquor License. #3: Oppose the new Class B (BLX, Beer, Wine and Liquor License
Staff Recommendation: Option #1
Recommended Motion: *I move that the City Council support (or not oppose) the issuance of a new Class B (BLX) Beer, Wine and Liquor License for the use of Milkboy College Park, LLC, t/a MilkBoy & Arthouse, subject to the applicant entering into a Property Use Agreement (PUA) with the City, in substantially the form as attached; authorize the City Manager to sign the PUA; and authorize staff to testify to the Council's position at the BOLC hearing.*
Attachments: 1. Draft Property Use Agreement

PROPERTY USE AGREEMENT

THIS PROPERTY USE AGREEMENT (the "Agreement") is made as of the _____day of October, 2016, by and between Milkboy College Park, LLC, t/a Milkboy + Arthouse, and William N. Hanson, Managing Member, Thomas C. Joyner and James W. Lokoff, Authorized Persons (collectively "Licensee"); and the CITY OF COLLEGE PARK, a Maryland municipal corporation (the "City").

WITNESSETH

WHEREAS, 7416 LLC is the owner of the real property located at 7416 Baltimore Avenue, College Park, Maryland 20740 (the "Property"); and

WHEREAS, the Property is located within the corporate limits of the City of College Park, Maryland; and

WHEREAS, Licensee has applied to the Board of License Commissioners of Prince George's County for a Class B, BLX, Beer, Wine and Liquor License ("License") for use at the Property, which is to be operated as a restaurant and performance space; and

WHEREAS, the Licensee has requested the support of the City for the issuance of the License for use at the Property; and

WHEREAS, the City agreed to not oppose/support the Licensee's application for the License, subject to Licensee entering into this Property Use Agreement; and

WHEREAS, in consideration of the covenants contained in this Agreement, the City will not oppose/will support issuance of the License, subject to the terms, conditions and restrictions contained herein.

NOW THEREFORE, in consideration of the foregoing, the mutual promises contained herein, and other good and valuable consideration, the receipt and sufficiency of which are hereby acknowledged, the parties hereto agree as follows:

1. Repair and Maintenance of the Property. Licensee shall keep the Property under its control in good order and repair, and free of debris and graffiti.

2. Restrictions. Except with the express written consent of the City, which consent may be withheld in the City's sole and absolute discretion, during the period that Licensee is using or has any interest in the Property, and is using the License, the use of the Property shall be restricted to the operation of a restaurant and performance/gallery space to be named Milkboy + Arthouse ("Restaurant") or another substantially similar operation, ~~which receives not more than fifty percent (50%) of its average daily receipts over any three consecutive monthly periods from the on-sale of alcoholic beverages, and~~ which complies strictly with the restrictions and requirements of the State of Maryland/Prince George's County Class B, BLX, Beer, Wine and Liquor License. ~~The calculation of the percentage of alcoholic beverages sold shall include the full cost of any such beverage, and not just the alcohol contained in the beverage. Licensee will provide the City, by January 25 of each year, with summaries of each month's receipts for the sales of alcoholic beverages and food for the preceding calendar year, and, at~~

~~any time, such information in such form as the City may reasonably require to permit the verification of sales required in this paragraph 2 of this Agreement. Such information need not be prepared by an accountant or auditor, but must be accompanied by a general affidavit signed by the Licensee affirming the accuracy of the information provided. Licensee may be required by the City to provide information to permit verification of the sales ratios required in this paragraph, including daily register receipts and the identity of, and invoices from, its alcohol and food suppliers. Any such information provided by Licensee that is claimed to be confidential shall be so marked by Licensee and the City will treat such record as confidential as allowed by law.~~

3. Use of Property. Except as otherwise set forth herein, those uses of the Property permitted by the applicable zoning for the Property shall be permitted uses for the purposes of this Agreement. In addition, the Property shall be subject to all of the restrictions imposed by the applicable zoning of the Property.

4. Noises and Nuisances. Licensee shall not permit any nuisance to be maintained, allowed or permitted on any part of the Property, and no use of the Property shall be made or permitted which may be noxious or detrimental to health or which may become an annoyance or nuisance to persons or businesses on surrounding property.

5. Operations. Licensee shall maintain and operate the Restaurant in a manner that all seats in the Restaurant space are available for dining, and no area in the Restaurant space is designated solely for the

consumption of alcoholic beverages. The parties recognize that, while food service will be available in the Restaurant space at all times that liquor is provided as required herein, the space dedicated to an entertainment or gallery event may be operating without food service. Alcoholic beverages willshall not be sold andor served only during those times authorized by the License, provided however, that Licensee will notify the City of its hours of operation once determined.prior to 611:00 a.m. or after 2:00 a.m., Sunday through Saturday, or after 3:00 a.m. on Friday and Saturday when live entertainment is present, with the exception that alcoholic beverages may be sold during full service brunch on Saturday, Sunday and holidays as otherwise allowed by law. Happy hour or like events shall be limited to 3:00 p.m. to 7:00 p.m. Food from a regular menu must be served at all times that the premises are open for business. At all times, at least 80% of the items listed on the regular menu shall be available for customers to order. The proposed menu provided by Licensee for the Restaurant is attached as Exhibit A. Live music is allowed only inside the Restaurant and in the outside area at the rear of the Property. Licensee shall ensure music levels in the Restaurant area and the outside area that allow patron conversation in a normal tone of voice, and prohibit disruptive or rowdy behavior that disturbs the peaceful enjoyment of the facility by Licensee's patrons and other persons visiting the facility. Nothing in this Agreement shall modify the noise levels allowed by law in the City. In the event that complaints as to the sound level of voice or music entertainment in the outside area are received by the City, the parties agree to review this condition, with further limitation of entertainment on the outside area, if justified, not to be

unreasonably refused by Licensee. The parties recognize that these noise level restrictions will not apply during entertainment events in the performance space.

Alcoholic beverages shall be served only to diners sitting at tables or counters inside the R~~r~~estaurant portion of the facility, and to patrons standing waiting for a table. The parties recognize that, during private parties and entertainment and gallery events, not all patrons may be seated, but that food will continue to be served in the Restaurant area. The minimum price for on-sale alcoholic beverages, including 16 oz. beers, shall be $2.00. Licensee will not sell beer in pitchers. Licensee will maintain all dining areas, including tables and chairs, inside the facility. Licensee shall ensure that the interior of the restaurant, including service areas, remain clean and graffiti free. The interior and exterior of the Property shall be rodent free. Licensee shall not allow grease, dirt, trash or graffiti to accumulate on any portion of the exterior of the Property that Licensee controls. Licensee agrees to fully comply with all applicable laws, including without limitation Subtitle 12, "Health", of the Prince George's County Code, and the Code of the City of College Park. Licensee shall not engage in window advertising of the sale of alcoholic beverages~~beer or wine~~, nor off-premises leafleting of cars or on public right of way promoting such sale~~the sale of beer or wine~~. All off-premises advertising of specials, happy hours or reduced prices for alcoholic beverages~~beer or wine~~ to be consumed on the Premises shall be limited to promotions coupling the sale or service of food with the sale of alcoholic beverages. Licensee shall use a scanner system, as allowed by law, designed to recognize false identification prior to making alcoholic beverage sales during regular Restaurant service. The

scanner shall be used for all persons who appear to be under the age of thirty five (35) years. Licensee will not accept State of Maryland vertical type licenses as proof of age. Nothing in this paragraph shall prevent Licensee from employing the services of an advertising agency to promote events controlled by Licensee on the Premises.

Licensee expects to provide live entertainment on a frequent basis at the Property. Cover and door charges may be charged by Licensee. The payment of a cover or door charge shall not reduce the normal price charged by Licensee for alcoholic beverages. Licensee shall not rent to, or otherwise allow the use of the facilities by, individuals or businesses involved in promoting or making a business or profit from producing musical, band or disc jockey events. Licensee shall not provide tables, such as a beer pong table, whose purpose is for use in drinking games. Licensee shall not sponsor or support drinking games within the Property.

Licensee shall recycle all materials identified as recyclable by Prince George's County. Licensee shall utilize only recyclable take-away containers, no Styrofoam or clamshells not recycled Countywide.

6. Enforcement. The City shall have the right to enforce, by any proceeding at law or in equity, including injunction, all restrictions, terms, conditions, covenants and agreements imposed upon the Property and/or Licensee pursuant to the provisions of this Agreement. The parties agree that if Licensee should breach the terms of the Agreement, the City would not have an adequate remedy at law and would be entitled to bring an action in equity for specific performance of the terms of this Agreement. In the event of a violation of

paragraph 2 of this Agreement, Licensee shall have sixty (60) days from the date of notification of the violation to adjust his operations and achieve compliance, as measured during the sixty (60) day period, with the requirements of paragraph 2 of this Agreement. In the event the City is required to enforce this Agreement and Licensee is determined to have violated any provision of this Agreement, Licensee will reimburse the City for all costs of the proceeding including reasonable attorney's fees. Should Licensee prevail in any action brought by the City to enforce a provision of this Agreement, the City shall reimburse Licensee for all costs of the proceeding including reasonable attorney's fees.

7. Waiver. Neither any failure nor any delay on the part of the City in exercising any right, power or remedy hereunder or under applicable law shall operate as a waiver thereof nor shall a single or partial exercise thereof preclude any other or further exercise thereof or the exercise of any other right, power or remedy.

8. Assignment of License. Licensee agrees that it shall not sell, transfer, or otherwise assign its rights under the License to any entity or individual for use or operation within the City without the express prior written consent of the City, which consent will not be unreasonably withheld.

9. Assignment. This Agreement shall be binding upon, and shall inure to the benefit of, the respective affiliates, transferees, successors and assigns of the parties hereto. The parties agree that Licensee shall have the right to assign their rights herein to an entity of their choosing, the majority of which is owned by Licensee.

10. Scope and Duration of Restrictions. The restrictions, conditions and covenants imposed by this Agreement shall be valid only so long as Licensee maintains a License at the Restaurant, or some other substantially similar casual dining restaurant.

11. Security. Pursuant to §26-1103 of the Alcoholic Beverages Annotated Code of Maryland, Licensee will be required to obtain a License for special entertainment or to obtain an exemption. Prior to seeking a License for special entertainment or an exemption, Licensee agrees that it shall first present to the City its plans for entertainment ~~as well as for any required security~~ and shall submit its proposed security plan to both the University of Maryland Police Department and the Prince George's County Police Department. For any activities authorized by such a license or exemption, the Licensee shall have and maintain a Security Plan to prevent the Property and any such activities from posing a threat to the peace and safety of the surrounding area. The Security Plan shall, at minimum, comply with the requirements of the Board of License Commissioners. Any required Security Plan for the Licensee is subject to review and revision annually or upon request by Prince George's County Police, the University of Maryland Police or the City of College Park. To the extent allowed by law, the City agrees to treat as proprietary and confidential any written security plans received from Licensee as part of the review process.

a. Licensee shall diligently enforce ID policies through trained and certified managers and employees. Licensee agrees to take all necessary measures to ensure that under age persons do not obtain alcoholic beverages.

b. All employees for whom the Board of License Commissioners requires TIPS training will be trained within two weeks of hire.

c. All serving, bar, security and management employees will be 18 years or older.

14. Notices. All notices given hereunder shall be in writing and shall be deemed to have been given when hand delivered against receipt of three (3) days after deposit with the United States Postal Service, as registered or certified mail, return receipt requested, postage prepaid, addressed:

(i) If to Licensee:

* * * *
7416 Baltimore Avenue
College Park, MD 20740

With copy to:

Linda Carter, Esq.
Meyers, Rodbell + Rosenbaum, P.A.
6801 Kenilworth Ave., Ste 400
Riverdale Park, MD 20737

If to the City:

Scott Somers
City Manager
City of College Park
4500 Knox Road
College Park, Maryland 20740

with copy to:

Suellen M. Ferguson, Esquire
Council, Baradel, Kosmerl + Nolan P.A.
125 West Street, 4th Floor
P.O. Box 2289
Annapolis, MD 21404

15. Amendments. This Agreement may not be amended or modified except in writing executed by all parties hereto, and no waiver of any provision or consent hereunder shall be effective unless executed in writing by the waiving or consenting party.

16. Severability. The provisions of this Agreement shall be deemed severable, so that if any provision hereof is declared invalid, all other provisions of this Agreement shall continue in full force and effect.

17. Governing Law. This Agreement shall be construed in accordance with and governed by the laws of the State of Maryland.

18. Counterparts. This Agreement may be executed in any number of counterparts each of which shall constitute an original and all of which together shall constitute one agreement.

19. Headlines. The headings or titles herein are for convenience of reference only and shall not affect the meaning or interpretation of the contents of this Agreement.

IN WITNESS WHEREOF, the parties hereto have set their hands and seals on the day and year first above written.

WITNESS/ATTEST Milkboy College Park, LLC,

_____ _____

William N. Hanson, Managing Member and Authorized Person

_____ _____

Thomas C. Joyner, Authorized Person

_____ _____

James W. Lokoff, Authorized Person

WITNESS/ATTEST

CITY OF COLLEGE PARK

_____

Janeen S. Miller, CMC, City Clerk

By:_____

Scott Somers, City Manager

APPROVED AS TO FORM AND LEGAL SUFFICIENCY:

_____

Suellen M. Ferguson, City Attorney

3

Amendments to the Fence Ordinance

CITY OF COLLEGE PARK, MARYLAND
WORKSESSION AGENDA ITEM

Prepared By: Terry Schum, Planning Director **Meeting Date:** October 14, 2016

Presented By: Suellen Ferguson, City Attorney **Proposed Consent Agenda:** No

Originating Department: Planning, Community and Economic Development

Issue Before Council: Amendments to Fence Ordinance and discussion of financial incentives to promote materials other than chain link.

Strategic Plan Goal: Goal 6: Excellent Services

Background/Justification: The City's Advisory Planning Commission (APC) held a Fence Ordinance Listening Session for the general community on December 3, 2015 which resulted in the APC issuing a letter to Mayor and Council with several recommendations for simplifying and streamlining Section 87-23 Fences in Chapter 87 Building Construction of the City Code. Subsequently, a Worksession between City Council and APC was held to discuss the recommendations, and APC was advised to work with the City Attorney on appropriate revisions to the Fence Ordinance. These revisions have been made and are presented in Attachment 1 for the Council's review.

One of the recommendations is to consider offering financial incentives to discourage the reconstruction or construction of chain link fences. This is not an Ordinance issue and the APC is still exploring ways in which this might be accomplished.

Fiscal Impact: The proposed revisions to the Ordinance will have no fiscal impact. There is currently no program or budget for offering financial incentives to variance applicants or other residents constructing fences but this would have a fiscal impact if implemented.

Council Options:

1. Introduce amendments to the Fence Ordinance as presented.
2. Make revisions to the proposed amendments prior to introduction.
3. Do not amend the Fence Ordinance.

Staff Recommendation:
#1

Recommended Motion:
Motion to amend Chapter 87 "Building Construction" by repealing and reenacting 84-23-3 "Fences."

Attachments:

1. Draft Ordinance
2. Letter dated March 3, 2016 to Mayor and Council

ORDINANCE
OF THE MAYOR AND COUNCIL OF THE CITY OF COLLEGE PARK, MARYLAND, AMENDING CHAPTER 87 "BUILDING CONSTRUCTION", BY REPEALING AND REENACTING §87-23 "FENCES", TO AUTHORIZE FRONT YARD GARDEN FENCES, CHANGE THE VARIANCE CRITERIA FOR FENCES, CONFORM TO COUNTY CODE REQUIREMENTS AND DEFINITIONS, AND CLARIFY EXISTING REQUIREMENTS

WHEREAS, pursuant to §5-202 of the Local Government Article, Annotated Code of Maryland, the City of College Park (hereinafter, the "City") has the power to pass such ordinances as it deems necessary to protect the health, safety and welfare of the citizens of the municipality and to prevent and remove nuisances; and

WHEREAS, Mayor and Council have adopted Chapter 87, "Building Construction" to ensure the health and safety of the residents of the City; and

WHEREAS, the Mayor and Council adopted §87-23, "Fences" to regulate the construction and re-construction of fences to preserve and protect the character of residential neighborhoods in the City, permit the rapid, free and unobstructed access to residences by emergency vehicles, personnel and equipment; allow for the unobstructed establishment, maintenance and creation of public rights-of-way along the streets and sidewalks in the City; prevent the obstruction or reduction, by man-made structures, of visibility at corners and intersections for drivers and pedestrians; add to the attractiveness and comfort of the residential district; create a better home environment in the City; preserve an area which is generally regarded by the public as pleasing to the eye; and preserve, improve and protect the general character of lands within the City and the improvements thereon; and

WHEREAS, the City's Advisory Planning Commission and City staff have recommended certain changes to the Council with respect to §87-23; and

WHEREAS, the Mayor and Council have determined that it is in the public interest to incorporate the recommended changes into §87-23.

Section 1. **NOW THEREFORE, BE IT ORDAINED AND ENACTED,** by the Mayor and Council of the City of College Park, Maryland that Chapter 87 "Building Construction", §87-23, "Fences" be and is hereby repealed and reenacted with amendments to read as follows:

§ 87-23**Fences.**

A. SCOPE: THIS SECTION SHALL APPLY TO ALL FENCES, AS DEFINED HEREIN, CONSTRUCTED, RECONSTRUCTED OR REPLACED ON RESIDENTIAL PROPERTIES IN RESIDENTIAL ZONES ON OR AFTER OCTOBER 19, 2005, EXCEPT THOSE ALLOWED BY APPROVED CONCEPTUAL SITE PLANS, DETAILED SITE PLANS AND SPECIAL EXCEPTIONS.

B. Definitions.
(1) As used in this section, the following terms shall have the meanings indicated:

~~[APPARENT FRONT YARD~~
~~The area of a residential lot between that part or parts of the building which appear(s) to be its front because of its architectural features and orientation to a publicly dedicated street or private street or private parking area and the dedicated street.]~~
FENCE

Any [~~hedge or other natural growth greater than four feet in height, any~~] structure, barrier, wall, retaining wall, or partition or combination thereof, REGARDLESS OF COMPOSITION, AND ANY HEDGE OR OTHER NATURAL GROWTH GREATER THAN FOUR FEET IN HEIGHT THAT CONSTITUTES A BARRIER TO ACCESS TO THE LOT, having the effect of or [~~erected for the~~] CONSTRUCTED AND MAINTAINED FOR purposeS SUCH AS, BUT NOT LIMITED TO, [~~of~~] enclosing a piece of land, dividing a piece of land into distinct portions, separating two contiguous estates, EXCLUSION, PROTECTION, PRIVACY SECURITY, RETAINMENT OR AESTHETICS. [~~or stopping and/or creating an obstacle to pedestrian crossings; and consisting of a section or sections of any type of fencing material, chain, railing, arbor, trellis, blocks, bricks, stones, wood, iron, wire, plastics, concrete or any other building or construction material or natural material~~; ~~provided, however that a structure which is solely for decorative purposes shall not constitute a fence, as long as such structure does not exceed four feet in height, and provided that such structures on any residential lot do not, in total, consist of more than two eight-foot sections, with each section located at least 12 feet from the other. The length of the materials shall be measured at their longest point. Such decorative structures shall be landscaped along their total length with bushes, shrubs, plants or flowers. "Fence" does not include an arbor or trellis that~~

~~is less than eight feet in length, and does not include underground, invisible animal restraint barriers.~~]

FRONT YARD

Front yard area shall be that area EXTENDING ACROSS THE WIDTH OF A LOT BETWEEN [~~a publicly dedicated right-of-way or private right-of-way or parking lot~~] THE FRONT STREET LINE and the NEAREST PART OF THE MAIN BUILDING (OR ITS ENCLOSED OR COVERED PROJECTION).[~~front building restriction line extending from side to side on the property. If the main structure on the lot is not contiguous with the front building restriction line, then the front yard is that area between the front of the main structure and the publicly dedicated right-of-way or private right-of-way or parking area, extending the full width of the lot.~~]THE AREA EXTENDING ACROSS THE WIDTH OF A LOT BETWEEN THE STREET LINE AND THE NEAREST PART OF THE MAIN BUILDING (OR ITS ENCLOSED OR COVERED PROJECTION), WHICH APPEAR(S) TO BE THE FRONT YARD BECAUSE OF THE ARCHITECTURAL FEATURES AND ORIENTATION TO THE STREET IS THE APPARENT FRONT YARD .WHEN THE [~~F~~]Front yard IS [~~shall include~~] the apparent front yard, THEN [~~and~~] the side[~~, side street~~] and rear yards of any such lot shall be determined by their relationship to the apparent front yard of the lot. WITH RESPECT TO THE PROHIBITION OF FENCES IN THE FRONT YARD, EXCEPT AS OTHERWISE REQUIRED BY LAW, THERE IS ONLY ONE FRONT YARD FOR ANY LOT.

GARDEN FENCE

A FENCE OF UP TO FOUR FEET IN HEIGHT ENCLOSING AN AREA USED FOR NON-COMMERCIAL GROWING OF PLANTS, HERBS, VEGETABLES, FRUITS OR FLOWERS.

HEIGHT

THE HEIGHT OF A FENCE MEASURED, FROM ONE POINT, FROM THE TOP OF THE FENCE TO THE GRADE ON THE SIDE OF THE FENCE WHERE THE GRADE IS THE LOWEST.

LOT

A DESIGNATED AREA OF LAND TO BE USED, DEVELOPED, OR BUILT UPON AS A UNIT IN ACCORDANCE WITH THE PRINCE GEORGE'S COUNTY ZONING ORDINANCE, AND HAVING THE MINIMUM CONTIGUOUS AREA REQUIRED FOR A LOT IN THE APPLICABLE ZONE, AND APPROVED FRONTAGE ON A PUBLIC STREET OR PRIVATE ROAD, RIGHT-OF-WAY, OR EASEMENT.

LOT, CORNER

A LOT FRONTING ON THE INTERSECTION OF TWO STREETS OR PUBLICLY DEDICATED RIGHTS-OF-WAY. FOR CORNER LOTS, ONE YARD FRONTING ON A STREET SHALL BE DETERMINED TO BE THE FRONT YARD OR APPARENT FRONT YARD AS DEFINED HEREIN, TO WHICH THE FRONT YARD FENCE PROHIBITION WILL APPLY.

LOT, THROUGH

A THROUGH LOT IS AN INTERIOR LOT FRONTING ON TWO (2) OR MORE STREETS OR A CORNER LOT FRONTING ON THREE (3) OR MORE STREETS. FOR THROUGH LOTS, ONE YARD FRONTING ON A STREET SHALL BE DETERMINED TO BE THE FRONT YARD OR APPARENT FRONT YARD AS DEFINED HEREIN TO WHICH THE FRONT YARD FENCE PROHIBITION WILL APPLY.

LOT LINE, FRONT

THE FRONT LOT LINE IS THE LINE RUNNING ALONG THE FRONT, OR APPARENT FRONT, OF THE LOT AND SEPARATING IT FROM THE STREET. THE FRONT LOT LINE MAY ALSO BE REFERENCED AS THE FRONT STREET LINE.

LOT LINE, REAR

A REAR LOT LINE IS THE LOT LINE GENERALLY OPPOSITE OR PARALLEL TO THE FRONT OR APPARENT FRONT LOT LINE.

LOT LINE, SIDE

A SIDE LOT LINE IS ANY LOT LINE OTHER THAN A FRONT OR APPARENT FRONT STREET LINE OR A REAR LOT LINE. A SIDE LOT LINE SEPARATING THE LOT FROM A STREET IS A SIDE STREET LINE.

MATERIALS INCORPORATING OPENNESS

TO SATISFY A REQUIREMENT THAT MATERIALS MUST INCORPORATE OPENNESS, THE SPACES BETWEEN THE SLATS, PLANKS, BOARDS, BALUSTERS OR PICKETS MUST EQUAL OR EXCEED THE WIDTH OF THE PLANKS, BOARDS, BALUSTERS OR PICKETS USED.

REAR YARD

[~~Rear yard area shall be that area of a residential lot between the rear of a main structure and the rear lot line, extending between the side yards, with the exception that, if a rear lot line abuts a publicly dedicated right-of-way, private right-of-way or parking area (excluding through corner lots, as defined herein), the rear yard shall extend the entire width of the rear lot line~~.] REAR YARD AREA SHALL BE THAT AREA EXTENDING ACROSS THE WIDTH OF THE LOT BETWEEN THE REAR LOT LINE AND THE NEAREST PART OF A MAIN BUILDING (OR ITS ENCLOSED OR COVERED PROJECTION).

RETAINING WALL.

A WALL BUILT TO RETAIN OR SUPPORT THE EXISTING LATERAL PRESSURE OF EARTH OR WATER OR OTHER SUPERIMPOSED LOAD.

[~~SIDE STREET YARD~~

~~Side street yard shall be that area of a residential lot on a corner or through corner lot which is not the apparent front yard, but which abuts a publicly dedicated right-of-way, private right-of-way or parking area.]~~

SIDE YARD

[~~Side yard shall be that area that is not part of the front yard or rear yard, and which is behind the building restriction line~~.] SIDE YARD SHALL BE THAT AREA BETWEEN THE SIDE LOT LINE OR SIDE STREET LINE AND THE NEAREST PART OF MAIN BUILDING (OR ITS ENCLOSED OR COVERED PROJECTION), EXTENDING FROM THE FRONT YARD TO THE REAR YARD, OR IN THE ABSENCE OF EITHER OF THESE YARDS, TO THE FRONT STREET LINE AND THE REAR LOT LINE. IN A THROUGH LOT, ANY YARD THAT DOES NOT ABUT A STREET IS A SIDE YARD

STREET

A STREET, AVENUE, RIGHT-OF-WAY, ROAD, HIGHWAY, THOROUGHFARE, LANE AND ALLEY.

[~~THROUGH CORNER LOT~~]

[~~A residential lot that abuts a publicly dedicated right-of-way or private right-of-way or parking area on three sides. For through corner lots, one yard abutting a publicly dedicated right-of-way, private right-of-way or parking area shall be determined to be the apparent front yard as defined herein, and the other two yards abutting publicly dedicated rights-of-way or parking areas shall be side street yards~~.]

YARD

OPEN SPACE LOCATED ON THE SAME LOT WITH A BUILDING, STRUCTURE (NOT INCLUDING GROUND-LEVEL PAVED SURFACES UNLESS SPECIFICALLY NOTED), OR USE, BETWEEN THE BUILDING, STRUCTURE OR USE (SUCH AS OUTDOOR STORAGE) AND THE NEAREST LOT LINE OR STREET LINE.

(2) Figure drawings illustrating the apparent front yard, front yard, side yard, rear yard, through [~~corner~~] lot, corner lot, visual obstruction setback and various types of fences are adopted and incorporated in this code by reference. [1]

C.[~~B.~~] Front yard fences. Except as hereinafter provided, fences shall not be constructed or reconstructed in a front yard.

[~~D. Scope. This section shall apply to all new fences, walls or combinations constructed, reconstructed or replaced on residential properties in residential zones, except those allowed by approved conceptual site plans, detailed site plans and special exceptions, on or after the effective date of this section~~.]

D. [~~E.]~~ Rear and side yard fences. Fences in rear and side yards [~~where the rear or side lot line is a continuation of the front yard line of the adjacent lot shall be set back 25 feet from the property line~~.] ON THROUGH LOTS AND CORNER LOTS SHALL BE SET BACK 25 FEET FROM THE STREET LINE. FOR A CORNER LOT CONSISTING OF ONE (1) ACRE OR LESS, FENCES IN THE SIDE YARD SHALL NOT BE MORE THAN FOUR (4) FEET HIGH.

E.[~~F.~~] Retaining walls. Retaining walls [~~built to retain or support the lateral pressure of earth or water or other superimposed load and otherwise designed and constructed of appropriate materials within allowable stresses and in conformance with acceptable engineering practices]~~ may be constructed where necessary in the front, side or rear yard, but shall not extend more than one foot above finished grade. [~~Construction, d~~] Dimensions, placement and materials for [~~new~~] retaining walls CONSTRUCTED AFTER OCTOBER 19, 2005 in locations otherwise requiring a fence variance [~~is subject to approval~~] SHALL BE DETERMINED by the Advisory Planning Commission. Landscaping up to a height of four feet, OR A RAILING OR FENCE AS REQUIRED FOR HEALTH AND SAFETY REASONS BY PRINCE GEORGE'S COUNTY, may be placed as approved on retaining walls.

F. Existing fences. This section does not prohibit the reconstruction or replacement, with same dimensions and placement, of any fence or wall legally existing before [the effective date of this section] OCTOBER 19, 2005, or for which a variance has been granted; provided~~,~~

[1] Editor's Note: The figure drawings are on file in the City offices.

[~~however,~~] that no such reconstructed or replaced fence or wall shall exceed four feet in height in the front yard. Replacement FRONT YARD fences MUST [~~may~~] be reconstructed of similar materials, or materials such as wrought iron, split rail, or picket, incorporating openness[~~and visibility~~]. Chain link may not be used for reconstruction unless it was the original material or a variance is obtained.

G. Right of way and setbacks. In no event shall a fence be constructed to encroach into the public right-of-way or violate the visual obstruction setbacks required by Prince George's County Code Section 27-421, as amended, for corner lots.

H. Prohibited materials. In no event shall a fence be constructed of barbed wire, electrically charged material, or other hazardous material.

I. Fence construction. [~~Where practicable, f~~] Fences shall be built with the finished side facing outwards AND STRUCTURAL SUPPORT (VERTICAL POSTS AND HORIZONTAL RAILS) SHALL FACE THE INTERIOR OF THE SUBJECT LOT.

J. Permit required. A City permit is required for the construction, replacement or reconstruction on residential property of all fences as defined in this section. A PERMIT IS NOT REQUIRED FOR:

(1) A STRUCTURE THAT DOES NOT EXCEED FOUR FEET IN HEIGHT, AND DOES NOT, IN TOTAL, CONSIST OF MORE THAN TWO EIGHT-FOOT SECTIONS, WHICH MAY BE STRAIGHT OR BEND IN SHAPE, WITH EACH SECTION LOCATED AT LEAST 12 FEET FROM THE OTHER. THE LENGTH OF THE MATERIALS SHALL BE MEASURED AT THEIR LONGEST POINT.
(2) AN ARBOR OR TRELLIS THAT IS LESS THAN EIGHT FEET IN LENGTH THAT IS NOT BEING USED AS PART OF A FENCE.
(3) UNDERGROUND OR INVISIBLE ANIMAL RESTRAINT BARRIERS.
(4) DECORATIVE ROCKS AND BOULDERS.
(5) A FRAME NO MORE THAN 12 INCHES IN HEIGHT USED TO ENCLOSE A RAISED PLANTING BED OR PLANTINGS.
(6) GARDEN FENCES NOT EXCEEDING FOUR FEET IN HEIGHT CONSTRUCTED IN A FRONT YARD PROVIDED THAT THE AREA ENCLOSED BY THE FENCE DOES NOT EXCEED 25% OF THE FRONT YARD, WITH A MINIMUM AREA ALLOWED OF UP TO FOUR FEET BY SIX FEET. POLES, TRELLISES, COLD FRAMES AND OTHER GARDEN APPURTENANCES LOCATED WITHIN THE GARDEN ENCLOSURE ARE PERMITTED. FENCING MATERIALS ARE LIMITED TO OPEN WIRE MESH SUCH AS POULTRY NETTING, CHICKEN WIRE OR RABBIT GUARD. A GARDEN FENCE MUST BE REMOVED ONCE THE GARDEN IS NO LONGER IN CULTIVATION.

K. VARIANCES [~~Appeals~~].

(1) The Advisory Planning Commission shall apply the following criteria to any application for a variance from the provisions of this section:
(a) A SPECIFIC PARCEL OF LAND HAS EXCEPTIONAL NARROWNESS, SHALLOWNESS, OR SHAPE, EXCEPTIONAL TOPOGRAPHIC CONDITIONS, OR OTHER [~~There is an~~] extraordinary situationS or conditionS that would support the request for a variance;
(b) Denial of the variance would result in a peculiar and unusual practical difficulty to, or an exceptional or undue hardship UPON, [~~to~~] the owner;
(c) Granting the variance will not impair the intent, purpose or integrity of the Fence Ordinance;
(d) The variance is consistent with the design guidelines adopted for the Historic District, if applicable;
(e) [~~The variance will not adversely affect the public health, safety, welfare or comfort;~~

~~(f)]~~ The FRONT YARD FENCE for which a variance is requested incorporates openness as much as is practicable; provided, however, that it shall not be constructed of chain link unless this material is consistent with the surrounding neighborhood~~.[; and~~]

~~[(g) The proposed construction, including setbacks, is characteristic of and consistent with the surrounding neighborhood. In neighborhoods where chain link is a characteristic material, alternate materials incorporating openness and visibility, may be permitted~~]
(2) Adjoining property owners shall be given written notice of any appeal by regular mail at least seven days prior to the hearing.

<u>Section 2</u>. **BE IT FURTHER ORDAINED AND ENACTED** by the Mayor and Council of the City of College Park that, upon formal introduction of this proposed Ordinance, which shall be by way of a motion duly seconded and without any further vote, the City Clerk shall distribute a copy to each Council member and shall maintain a reasonable number of copies in the office of the City Clerk and shall post at City Hall, to the official City website, to the City-maintained e-mail LISTSERV, and on the City cable channel, and if time permits, in any City newsletter, the proposed ordinance or a fair summary thereof together with a notice setting out the time and place for a public hearing thereon and for its consideration by the Council.

The public hearing, hereby set for _____ P.M. on the _____ day of _____, 2016, shall follow the publication by at least seven (7) days, may be held separately or in

connection with a regular or special Council meeting and may be adjourned from time to time. All persons interested shall have an opportunity to be heard.

After the hearing, the Council may adopt the proposed ordinance with or without amendments or reject it. This Ordinance shall become effective on _____, 2016 provided that, as soon as practicable after adoption, the City Clerk shall post a fair summary of the Ordinance and notice of its adoption at City Hall, to the official City website, to the City-maintained e-mail LISTSERV, on the City cable channel, and in any City newsletter. A certified copy of this Ordinance shall be submitted to the Prince George's County Council within five days after its adoption. The Ordinance shall become effective twenty (20) days after review and approval by the County Council.

INTRODUCED by the Mayor and Council of the City of College Park, Maryland at a regular meeting on the _____ day of _____ 2016.

ADOPTED by the Mayor and Council of the City of College Park, Maryland at a regular meeting on the _____ day of _____ 2016.

EFFECTIVE the ____ day of _____, 2016.

ATTEST:

By: _____
Janeen S. Miller, CMC, City Clerk

CITY OF COLLEGE PARK

By: _____
Patrick L. Wojahn, Mayor

APPROVED AS TO FORM AND LEGAL SUFFICIENCY:

_____

Suellen M. Ferguson, City Attorney

City of College Park
240-487-3500
www.collegeparkmd.gov

City Hall
4500 Knox Road
College Park, MD 20740-3390

City Manager
240-487-3501

City Clerk
240-487-3501

Finance
240-487-3509

Human Resources
240-487-3533

Parking Enforcement
240-487-3520

Planning
240-487-3538

Youth & Family Services
4912 Nantucket Road
College Park, MD 20740-1458

240-487-3550

Seniors Program
301-345-8100

Public Services
4601 A Calvert Road
College Park, MD 20740-3421

Code Enforcement
240-487-3570

Public Works
9217 51st Avenue
College Park, MD 20740-1947

240-487-3590

March 3, 2016

Patrick Wojahn, Mayor
City of College Park, MD
4500 Knox Road
College Park, Maryland 20740

Re: College Park Fence Ordinance Listening Session

Dear Mayor Wojahn and Members of Council,

The College Park Advisory Planning Commission (APC) held a Fence Ordinance Listening Session on December 3, 2015 in order to obtain public comment on the City Fence Ordinance. At the session, Planning Department staff provided an overview of the City's ordinance (see Attachment 1, PowerPoint Presentation), which was followed by verbal testimony from five individuals. In addition, written comments were submitted by the Committee for a Better Environment (CBE) and two individuals. The minutes from the meeting are included as Attachment 2 and the written testimony received is included as Attachments 3 and 4.

Based on this information and follow-up discussions with APC members and staff, the APC has several recommendations for simplifying and streamlining the fence ordinance regulations in response to the comments that were received. These are listed below for your consideration:

1. The definition of a fence, as written, is too long and confusing. Provide clear and concise definitions for the different types of fences mentioned (hedge, decorative fence and retaining wall).

2. Clearly state what does not constitute a fence and include decorative rocks or boulders in that statement.

3. Define a new fence type called "Garden Fence," with the intent of enclosing and protecting a home garden that grows fruits and/or vegetables.

4. Allow garden fences in the front yard under certain circumstances. We recommend that these fences be allowed up to a height of 4 feet to enclose the garden but not the entire front yard (up to a certain percentage of the yard should be specified). Raised beds, poles, trellises, cold frames and other appurtenances that are part of the garden could be permitted. Garden fence materials should be limited to open wire mesh such as poultry netting (chicken wire) or rabbit guard. When the garden is no longer in use, it should be required to be dismantled.

5. Review the definitions of "yards" and align them with the definitions used by Prince George's County to the extent possible.

6. Provide a specific requirement for "incorporating openness and visibility" such as: "Spaces between fencing material (planks/pickets) shall be at least as wide as the planks/pickets (50%) opacity."

7. Revise the section on retaining walls for clarity.

8. To further discourage chain link fences, the City should consider offering financial incentives to promote the use of other fence materials.

9. Reduce the number of criteria required to be met in order to obtain a variance. Zoning ordinance appeals only have three criteria while the fence ordinance has seven.

10. In general, reorganize the provisions of the ordinance for clarity so that the purpose and scope are listed first, regulations next and definitions last.

11. Include illustrative drawings and diagrams as part of the ordinance.

We thank you for your consideration of these recommendations and offer our assistance should this matter be addressed further.

Sincerely,

Christopher Gill, Chairman
Advisory Planning Commission

4

College Park City University Partnership

5

Detailed Site Plan for EZ Storage

CITY OF COLLEGE PARK, MARYLAND
WORKSESSION AGENDA ITEM

Prepared By: Miriam Bader
Senior Planner

Meeting Date: October 18, 2016

Presented By: Miriam Bader

Proposed Consent Agenda: No

Originating Department: Planning, Community and Economic Development

Issue Before Council: Review of EZ Storage DSP-15031

Strategic Plan Goal: Goal 3: High Quality Development and Reinvestment

Background/Justification:
See City staff report, Attachment 1.

Fiscal Impact:
Currently, the City receives from Hydra Lift Industrial Truck:

1. Real Estate Tax: $5,048.79 (FY 2016)
2. Personal Property Tax: 1,545 (FY 2016)

Total: $6,593

Estimate from the proposed EZ Storage:

1. Real Estate Tax: Projected to increase. The new EZ storage building will be over five times the size of the existing, depreciated garage.
2. Personal Property Tax: $0.00 based on other EZ storage facilities in the area. These facilities do not have much furniture, fixtures or inventory.

The Fiscal Impact is expected to be favorable since the property assessment will likely go up with the new, larger building.

Council Options:
1. Accept the Staff Recommendation
2. Provide Alternative Recommendations
3. Deny Support of the DSP

Staff Recommendation:
#1

Recommended Motion:
Motion to accept the Staff recommendation.

Attachments:
1. City Staff Report
2. Applicant Statement of Justification
3. Variance Justification
4. PMA Impact Justification
5. Site Plan
6. Landscape Lighting Plan
7. Frontage Exhibit

Attachment 1

City Staff Report

Detailed Site Plan (DSP) 15031
EZ Storage
5151 Branchville Road

Request

The Applicant, EZ Storage, is requesting approval of a Detailed Site Plan to construct a 3-story, consolidated self-storage warehouse with surface parking on a 1.82 acre site at 5151 Branchville Road. Also, the Applicant is requesting a 10-foot front yard setback variance. Currently, the property is improved with a 21,378 square foot, hydraulic truck repair facility (Hydra Lift Industrial Truck) with associated surface parking, which will be razed. The Planning Board is scheduled to hear this case on Thursday, November 3rd. The M-NCPPC Technical Staff Report may be available on October 21st.

Zoning

The subject property is zoned I-2 and is within the 2001 Approved Sector Plan for the Greenbelt Metro Area.

Surrounding Uses and Zoning

Direction from subject site	Use	Zoning
North (across Branchville Road)	Auto Repair Facilities, Building Supply, CSX Vacant Land	I-2
South	Maryland State Highway 193-Greenbelt Road	NA
West	Elevator Repair (contractor's office with outside storage)	CSC
East	CSX right-of-way	NA

Conformance with the 2001 Approved Sector Plan for the Greenbelt Metro Area

The proposed development is identified as located in the North College Park subarea of the Greenbelt Metro Area Sector Plan. The plan recommends "incompatible industrial uses in the southern portion of North College Park (Branchville) should be phased out and the land should be redeveloped with appropriate residential uses." [p. 121]. Implementation of this recommendation would require rezoning of the property from I-2 to an appropriate residential zone. This property is unlikely to transition to residential use given its size, location adjoining a major highway and the railroad tracks and industrial development to the north and west. Converting the use from heavy industrial (hydraulic industrial truck repair) to light industrial (self-storage) is a positive move in the envisioned direction.

Environmental Features

The Primary Management Area (PMA), regulated environmental features, comprises 1.62 acres or 89% of the site. It is comprised of floodplain and areas of steep slopes. The PMA located on the southern portion of the property consists of steep slopes due to the grading changes from the site to Greenbelt Road. The steep slopes also contain woodlands approximately 50 feet to 70 feet wide that extend into the Greenbelt Road right-of-way and serve as a buffer between the site and the road. The PMA has been impacted almost entirely by previous development of the site.

The Applicant has strived to avoid or minimize additional impact to the PMA. Only 15% of the total PMA impact is new impact. In addition, redevelopment of the site will include stormwater management and bio-retention practices that will help improve water quality. The Applicant is proposing to provide 4 micro-bio-retention areas on site (one on the north side, one on the west side and two on the east side). Since none of these measures currently exist on-site, the water quality will be drastically improved with the proposed development.

Building Design

Building
The Applicant is proposing a 3-story building 36-feet high with a total floor area of 116,370 square feet (38,790 square feet per floor). The building consists of 850 storage units, an office (1,200 square feet) and a residence and patio for on-site management (1,471 square feet). It complies with the Zoning Ordinance consolidated storage standards (Sec. 27-475.04) that state: "No entrances to individual consolidated storage units will be visible from the street or from adjoining land" and "entrances to individual consolidated storage units shall be either oriented toward the interior of the development or completely screened from view by a solid wall with landscaping."

Building Elevations
The 3-story building will have a flat roof. The office entrance will be framed by 3 arched windows and two storefront windows and a glass door. Materials consist mainly of red split-face CMU capped with a band of beige split-face CMU below the roof-line with two narrow bands of EIFS above and below the top band. Rectangular windows are located on all sides.

Site Design

Lot Coverage
The I-2 zone requires a minimum 10% of green area coverage. The Applicant meets and exceeds this requirement by providing 32% of green area.

Access
The existing truck repair garage is served by a curb-cut on Branchville Road located on the northwestern side of the lot. The Applicant is proposing to keep this curb-cut but use it as restricted access only for storage unit tenants and create another curb-cut further east for public access to the office.

Parking
Two parking lot areas are proposed with separate entrances. The western parking area consists of 20 gated parking spaces and serves the self-serve storage spaces. The smaller parking area consists of 7 parking spaces including a handicapped accessible space, and serves the resident manager and office use.

Fencing
A 6-foot high aluminum fence is shown along the western property line and parking lot. A 6-foot high wood patio fence is shown at the residence. And 6-foot high aluminum fence with gates is shown to provide secure access to the storage space parking lot. A detail was provided.

Signage
The Applicant is proposing 3 individual-letter signs for a total sign square footage of 400 square feet, which meets the Zoning Ordinance standards. A detail was provided.

Branchville Road Streetscape
Though not shown on the detailed site plan, the Applicant has submitted a frontage exhibit that responds to City staff's requests. Currently, Branchville Road has a variable right-of-way of 30-50 feet. The Applicant is proposing to dedicate right-of-way to the City along the front of the subject property to establish 25 feet from the centerline of the road. In addition, the Applicant will construct a 4-foot wide sidewalk at the curb to the easternmost parking lot and plant 2 street trees behind the curb. A 7-foot wide planting area with 3 street trees will be provided to the east of this parking lot. Branchville Road dead-ends at the eastern limits of the property. City staff requested and the Applicant has provided a turn-around area at this dead-end to facilitate traffic circulation.

Variance Setback Request
In the I-2 zone, a minimum front yard setback of 25-feet is required. The property has existed in its current form since the completion of the existing building in 1951, setting back only 15-feet at its closest point to the right-of-way and increasing to 25-feet at its farthest point. The Applicant proposes to incorporate the original floor slab into the new building and is requesting a 10-foot setback variance. The Applicant is not proposing an increase to existing conditions and will use the existing floor slab. Staff supports the requested variance to allow the building to be closer to the street than 25 feet.

Landscaping

The proposal will conform to the Landscape Manual. Landscaping will include a mixture of maples, oaks and evergreen and deciduous shrubs to be mainly located along Branchville Road. An existing 56.5-foot wide undisturbed natural buffer area along Greenbelt Road is proposed to remain (30.5-feet on site and 26-feet located in the Greenbelt Road Right-of-Way).

RECOMMENDATION

City staff recommends supporting DSP-15031 including the variance to allow the building to be closer to the street than 25 feet subject to the following condition:

1. Prior to signature approval of the DSP, the applicant shall revise the site plan to incorporate the improvements shown on the submitted frontage exhibit including right – of-way dedication to the City of College Park for Branchville Road, a turn-around area at the end of Branchville Road, sidewalk construction and landscaping.

Statement of Justification
ezStorage College Park
Detailed Site Plan. DSP-15031

Applicant:
Siena Corporation
8221 Snowden River Parkway
Columbia, MD 21045
443.530.3070

Attorney:
Arthur Horne
Shipley & Horne, P.A.
1101 Mercantile Lane, Suite 240
Largo, MD 20774
301.925.1800

Engineer/ Planner:
Soltesz
4300 Forbes Boulevard, Suite 230
Lanham, MD 20706
301.794.7555

1.0 Introduction

This Statement of Justification is presented in support of the Detailed Site Plan DSP-15031. The Applicant, Siena Corporation, hereby requests approval of a Detailed Site Plan for the proposed development of an ezStorage building on a property consisting of 1.82 acres. The proposed building will be approximately 116,370 sf. The property will include surface parking for 31 spaces. The building has 5 residential levels as well as a parking garage containing 5.5 levels. Entry ways for the parking levels are located on an interior private road. Pursuant to Section 27-547 of the Prince George's county zoning ordinance, the applicant is hereby requesting a Detailed Site Plan approval to develop an ezStorage building on the subject property.

Soltesz, Inc. has reviewed the necessary documents including but not limited to, Subtitle 27, the Plan Prince George's 2035 Adopted General Plan, the Master Plan, the Approved Sector Plan and Sectional Map Amendment for the Greenbelt Metro Area, Subtitle 24, and the Landscape Manual, in order to address the needs of the Statement of Justification and the Detailed Site Plan for this application. The following presents the necessary information for justification.

2.0 Property Information

The Subject Property is located in part of the Approved Sector Plan and Sectional Map Amendment for the Greenbelt Metro Area at 5151 Branchville Road, College Park, MD 20740. The site is bounded by Branchville Road to the north, CSX lines to the east, Greenbelt Road to the south, and C-S-C zoned and developed property to the west. The present facility consists of an I-2 zoned "Hydra Lift Industrial Truck, Inc" hydraulic repair facility with associated surface parking. The property has been envisioned for redevelopment since the Approved Sector Plan and Sectional Map Amendment for the Greenbelt Metro Area was adopted in 2001. The present proposal is to construct an ezStorage facility with surface parking.

3.0 Conformance with Detailed Site Plan Requirements

The general and specific purposes of a Detailed Site Plan (DSP) are contained in Section 27-281(b)(c) of the Zoning Ordinance: Section 27-281, Purpose of Detailed Site Plans.

(b) General Purposes

(1) The general purposes of Detailed Site Plans are:

(A) To provide for development in accordance with the principles for the orderly, planned, efficient and economical development contained in the General Plan, Master Plan, or other approved plan;

(B) To help fulfill the purposes of the zone in which the land is located;

(C) To provide for development in accordance with the site design guidelines established in this Division; and

(D) To provide approval procedures that are easy to understand and consistent for all types of Detailed Site Plans.

Comment: These purposes are discussed in detail below.

GENERAL PURPOSES OF THE DETAILED SITE PLAN

A. Sec. 27-281 (B)(1)(A) To Provide For Development In Accordance With The Principles For The Orderly, Planned, Efficient, And Economical Development Contained In The General Plan, Master Plan Or Other Approved Plan.

(1) The General Plan:

The Plan Prince George's 2035 Adopted General Plan, has among its plan framework, the need to provide Guiding Principles to guide the Plan 2035 vision, policies, and strategies. (Plan 2035, Pg. 19). These Guiding Principles are:

General Plan Guiding Principles

1. Concentrate Future Growth
2. Prioritize and Focus our Resources
3. Build on Our Strengths and Assets
4. Create Choice Communities
5. Connect Our Neighborhoods and Significant Places
6. Protect and Value Our Natural Resources

Comment: The subject site is located within the Approved Sector Plan and Sectional Map Amendment for the Greenbelt Metro Area. This proposed project will concentrate growth to the surrounding properties in the area. Although this site is planned for residential infill by the Sector Plan, its location is not ideal for residential. The site occupies a corner of this "residential infill" bubble that is directly adjacent to CSX lines. Additionally, although it is bordered by Greenbelt road to the south, it is inaccessible from this road due to steep grade where Greenbelt Road starts its overpass of the CSX line. Therefore residential is not ideal for this particular corner, and the proposed ezStorage could flourish here, while concentrating the residential to more ideal areas within the "residential infill" bubble. Existing businesses will flourish and new business opportunities will be created with the ezStorage addition. The site will take advantage of visibility provided from the arterial road it is adjacent to (Greenbelt Road) and make sufficient use of the other existing infrastructure (Branchville Road) to provide site access. The subject property will fit in well with the community, and because of its proximity to existing infrastructure, connections to significant areas within Prince George's County will be abundant. Environmentally sensitive areas including floodplain and forest exist on site. The floodplain is present on the majority of the site. However, the site is currently developed and new development will only impact a little more of the floodplain. The "forest" that exists on site is only truly considered forest when you include the trees which exist within the Greenbelt Road right-of-way. Then, and only then, does the forest actually achieve a 50'-70' width in order to be actually considered forest. This "forest" is not expansive and contributes very little environmentally. It serves more as a buffer of Greenbelt Road from the site.

General Plan- Primary Employment Areas

Plan 2035 designates parts of the City of College Park, the City of Greenbelt, the Town of Riverdale Park, Edmonston, Berwyn Heights, and areas along the Route 1 Corridor and around the Beltsville Agricultural Research Center (BARC) as Primary Employment Areas. These areas have the highest concentrations of economic activity in the four targeted industry clusters and have greatest potential to catalyze future job growth, research, and innovation in the near- to mid-term. These areas are well positioned to capitalize on the synergies that derive from businesses, research institutions, and incubators locating in close proximity to one another and on existing and planned transportation investment, such as the Purple Line.

Comment: The subject property is being developed with a use in keeping with the Primary Employment Area theme. The site will feature high quality urban design that will coincide with adjacent residential and commercial/retail uses. The ezStorage facility takes advantage of its proximity to Greenbelt and Branchville Roads and future surrounding employment areas and surrounding residential and commercial/retail. In this way, the project capitalizes on existing infrastructure and existing complimentary uses.

(4) Approved Sector Plan and Sectional Map Amendment for the Greenbelt Metro Area.

Comment: The Sector Plan "represents an excellent opportunity in the County to create a mixed-use, transit oriented community integrated with a large natural open space. Capitalizing on this opportunity to guide growth around the Greenbelt station required applying the following four planning principles: 1) Provide quality development within a safe and effective multimodal transportation system that balances transit, bicycle, pedestrian and automobile circulation; 2) Protect and strengthen the regional ecological systems; 3) Create a sense of community identity and place; and 4) Apply transit village and other neo-traditional planning concepts common in the urban design to promote residential communities oriented toward activity centers, transit and pedestrians. These principles and goals are similar to those described in the General Plan above.

The site falls into the North College Park subarea within the Sector Plan. The objectives of the North College Park subarea are the following: 1) Maintain the existing low-density residential character of this community; 2) Enhance the community with improved pedestrian and bicycle linkages within the community and to other subareas, especially the Greenbelt station; 3) Phase out incompatible industrial land uses in North College Park; 4) Infill vacant and industrial areas with compatible residential development; and 5) Maintain a strong, healthy commercial center to serve nearby resident's needs. These objectives are similar to those described in the General Plan above. The instant proposal remains consistent with these goals.

(c) Specific Purposes

(1) The specific purposes of Detailed Site Plans are:

(A) To show the specific location and delineation of buildings and structures, parking facilities, streets, green areas, and other physical features and land uses proposed for the site;
(B) To show specific grading, planting, sediment control, woodland conservation areas, regulated environmental features and storm water management features proposed for the site;
(C) To locate and describe the specific recreation facilities proposed, architectural form of buildings, and street furniture (such as lamps, signs, and benches) proposed for the site; and
(D) To describe any maintenance agreements, covenants, or construction contract documents that are necessary to assure that the Plan is implemented in accordance with the requirements of this Subtitle.

Comment: These purposes are discussed in detail below.

SPECIFIC PURPOSES OF THE DETAILED SITE PLAN

A. Sec. 27-281 (C)(1)(A) To Show The Specific Location And Delineation Of Buildings And Structures, Parking Facilities, Streets, Green Areas, And Other Physical Features And Land Uses Proposed For The Site.

Comment: The submitted Detailed Site Plan shows the specific location and delineation of buildings and structures, parking facilities, streets, green areas, and other physical features and land uses proposed for the site.

B. Sec. 27-281 (C)(1)(B) To Show Specific Grading, Planting, Sediment Control, Woodland Conservation Areas, Regulated Environmental Features And Storm Water Management Features Proposed For The Site.

Comment: The DSP included in this application shows the specific grading and planting. A TCPII is submitted to address woodland conservation. A separate Stormwater Management Concept Plan will be submitted with the application as well and will focus on proposed stormwater management practices.

C. Sec. 27-281 (C)(1)(C) To Locate And Describe The Specific Recreation Facilities Proposed, Architectural Form Of Buildings, And Street Furniture (Such As Lamps, Signs, And Benches) Proposed For The Site.

Comment: The submitted Detailed Site Plan, Landscape and Lighting Plans, and Architectural Elevations show the architectural form of buildings, lighting, and signage proposed for the site. All the necessary information is shown on the above plans.

D. Sec. 27-281 (B)(1)(D) To Describe Any Maintenance Agreements, Covenants, Or Construction Contract Documents That Are Necessary To Assure That The Plan Is Implemented In Accordance With The Requirements Of This Subtitle.

Comment: There are no anticipated maintenance agreements or covenants necessary for the development of this site. Construction documents - Storm Drain and Paving Plans, Stormwater Management Plans, Sediment Control Plans, and Architectural Plans- will be prepared, submitted to appropriate review authorities, and approved prior to issuance of a Building Permit.

4.0 Part 7. I-2 Zone (Heavy Industrial)

Sec. 27-470(a). Purposes.

(a) The purposes of the I-2 Zone are:
  (1) To accommodate a mix of intense industrial uses which require larger tracts of land;

Comment: The Sector Plan states that one of its objectives is to phase out incompatible industrial land uses in North College Park. Since this type of use is incompatible with the surrounding character and overall goal of North College Park, a heavy industrial use will not be pursued.

  (2) To accommodate industrial uses that may impact adjoining properties, but are essential to the County's economic well-being;

Comment: The Sector Plan states that one of its objectives is to phase out incompatible industrial land uses in North College Park. Since this type of use is incompatible with the surrounding character and overall goal of North College Park, a heavy industrial use will not be pursued.

(3) To apply site development standards which will generate an attractive, conventional heavy industrial environment;

Comment: The Sector Plan states that one of its objectives is to phase out incompatible industrial land uses in North College Park. Since this type of use is incompatible with the surrounding character and overall goal of North College Park, a heavy industrial use will not be pursued.

Sec. 27-470(d). Uses.

The uses allowed in the I-2 Zone are as provided for in the Table of Uses (Division 3 of this Part).

Comment: The proposed use of consolidated storage are permitted uses in the I-2 zone.

Sec. 27-470(e). Regulations.

(a) Additional regulations concerning the location, size, and other provisions for all buildings and structures in the I-2 Zone are as provided for in Divisions 1 and 5 of this Part, the Regulations Tables (Division 4 of this Part), General (Part 2), Off-Street Parking and Loading (Part 11), Signs (Part 12), and the Landscape Manual.

Comment: The site will conform to the regulations set forth in these sections unless superseded by the Sector Plan design standards.

Sec. 27-475.04 – Consolidated Storage

(a) Beginning June 23, 1988, a Detailed Site Plan shall be approved for consolidated storage developments in accordance with Part 3, Division 9, of this Subtitle to insure compliance with the provisions of this Section. Consolidated storage constructed pursuant to a building permit issued prior to this date; consolidated storage for which grading permits were issued prior to this date, subject to Subsection (b); and consolidated storage for which applications for building permits were filed on September 22, 1987, and which are actively pending as of October 25, 1988, subject to Subsection (b), need not meet these requirements.

a. Requirements.

i. No entrances to individual consolidated storage units shall be visible from a street or from adjoining land in any Residential or Commercial Zone (or land proposed to be used for residential or commercial purposes on an approved Basic Plan for a Comprehensive Design Zone, or any approved Conceptual or Detailed Site Plan).

ii. Entrances to individual consolidated storage units shall be either oriented toward the interior of the development or completely screened from view by a solid wall, with landscaping along the outside thereof.

iii. The maximum height shall be thirty-six (36) feet. Structures exceeding this height and approved before January 1, 2000, shall not be considered nonconforming.

(b) In order for a consolidated storage for which a grading permit had been issued prior to June 23, 1988, or for which application for a building permit was filed on September 22, 1987, and which is actively pending as of October 25, 1988, to be exempted from the Detailed Site Plan requirement of Subsection (a), the permit application or the attendant site plan must identify the consolidated storage as the proposed use, and the warehouse must comply with paragraph 1 of Subsection (a).

Comment: The requirements for this section are proposed to be met.

5.0 Conformance with Sector Plan subarea "North College Park" Design Policies and Development and Design Guidelines

Design Policies:

1. Preserve the residential neighborhood. Enhance the community through minor upgrades such as the addition of sidewalks, designated bike routes and improvements to the retail center.

Comment: The residential neighborhood will not be adversely affected by development proposal. Minor upgrades in the form of sidewalk and road/curb improvements will likely occur on Branchville Road directly adjacent to the site.

2. Phase out incompatible industrial uses in Branchville and infill with more compatible residential uses as a long-range redevelopment recommendation.

Comment: The existing industrial use on-site will be removed for the proposed ezStorage building.

3. Continue to revitalize the neighborhood commercial center in the northern end of the community.

Comment: This area does not pertain to the subject site.

4. Develop the vacant Endelmann tract, bordered by the CSX/Metrorail tracks, Lackawanna Street, 53rd Avenue, 52nd Avenue and Kenesaw Street, with single-family detached housing.

Comment: This area does not pertain to the subject site.

5. Maintain the open space, at the convergence of Indian Lane and Delaware Street and bordered by 51st Avenue, Huron Street and the CSX/Metro tracks, as open space until such time as the planned middle school is built.

Comment: This area does not pertain to the subject site.

6. Improve pedestrian mobility within the community by maintaining existing sidewalks, providing new sidewalks on both sides of streets south of Lackawanna Street, providing crosswalks with special paving at major intersections, and installing or maintaining pedestrian-scaled lighting.

Comment: Sidewalks will likely be improved adjacent to the site along Branchville Road

7. Maintain the existing pedestrian linkage in the northern end of Hollywood that connects to the Metrorail station. Request that WMATA permit access along this walkway during all hours once a 24-hour environment is established in the North Core Area.

Comment: This area does not pertain to the subject site.

8. Evaluate the feasibility, location and number of additional pedestrian and bicycle connections to integrate North College Park with the proposed development in the Core Area and other surrounding areas, such as Lake Artemesia and Beltway Plaza. Two possible locations for pedestrian crossings over the CSX/Metro tracks include: near the open space at Indian Lane and Delaware Street; and at Narragansett Road extended.

Comment: This area does not pertain to the subject site.

Development and Design Guidelines: Community Framework:

a. North College Park should be preserved as a low-density residential community supporting the Greenbelt station transit neighborhood.

Comment: North College Park will be preserved as a low-density residential community even with the addition of the proposed ezStorage building.

b. The vacant Endelmann property should be developed into low-density housing compatible with surrounding properties.

Comment: This area does not pertain to the subject site.

c. Incompatible industrial uses in the southern portion of North College Park (Branchville) should be phased out and the land should be redeveloped with appropriate residential uses. Housing development plans submitted should be evaluated and reviewed for compatibility, appropriateness at a given location and the need for the type of housing.

Comment: The existing incompatible industrial uses will be phased out in favor of the proposed ezStorage. Although not a residential use, the ezStorage is appropriate for this location because of the site's limited vehicular access (only accessible from Branchville Road) and noise pollution because of its proximity to the CSX line.

d. Visual buffers and noise barriers should be provided along the eastern edge of the community to effectively screen the railroad tracks.

Comment: Visual buffers may be proposed in the form of landscaping. Noise barriers will likely not be constructed since the site will not have a residential use.

e. The Hollywood commercial center should be stabilized through revitalization efforts such as improved vehicular and pedestrian circulation, comprehensive sign programs, tree plantings and general maintenance. Although Rhode Island Avenue designates the boundary of the Sector Plan Area, a comprehensive planning and design approach should be undertaken for the Hollywood commercial center to ensure compatibility along both sides of this roadway.

A business association should implement the revitalization strategies to retain current tenants and attract new business owners.

Comment: This area does not pertain to the subject site.

Development and Design Guidelines: Neighborhood Preservation:

a. The residential character and architectural integrity of the existing residential community should be maintained, especially when planning and developing vacant parcels and the adjacent transit station site.

Comment: The residential character and architectural integrity will not be adversely affected by the development proposal.

b. Existing residences and landscapes should be well kept, maintained and, if necessary, renovated. Damaged or deteriorated elements should be replaced or repaired with materials that closely match the original structure. The original design, scale and character of the structure should be retained.

Comment: Existing residences and landscapes will not be affected by the development proposal.

c. Front porches should not be drastically altered from their original design or scale, nor should they be enclosed.

Comment: Front porches will not be affected by the development proposal.

d. Additions to existing dwellings should be carefully designed with a scale and characteristics compatible to the existing buildings. Additions should preferably be located on side or rear facades to maintain consistency of front facades along the street.

Comment: No additions are proposed to be made to any existing structure.

e. Architectural elements, materials and openings on building additions should be proportionately compatible to the original structure and appear as a cohesive design.

Comment: No additions are proposed to be made to any existing structure.

f. Infill single-family detached housing on vacant property should relate to the neighborhood's character and existing structures' style, setback, roof type, height, scale and proportion.

Comment: No infill residential development is proposed.

g. Industrial properties redeveloped to residential uses, other than single-family detached, should be compatible and contribute positively to the integrity and character of the North College Park neighborhood.

Comment: The subject site industrial property will be redeveloped into a residential use.

h. The open space at Indian Lane and Delaware Street should remain as community open space.

Comment: This area does not pertain to the subject site.

Development and Design Guidelines: Circulation:

a. Signalization and/or design studies should be conducted at the intersection of Rhode Island Avenue and Edgewood Road to analyze and alleviate inadequate or unsafe access for motorists, bicyclists and pedestrians.

Comment: This area does not pertain to the subject site.

b. Sidewalks should be installed on both sides of streets in Branchville, south of Lackawanna Street, and should be separated from the roadway by a landscaped median no less than four feet wide.

Comment: A sidewalk will be constructed on Branchville Road adjacent to the subject site.

c. Sidewalks should be generally six feet wide to accommodate a variety of users and should connect with hiker-biker trails to link activity, neighborhood and commercial centers within and surrounding the community, including the Trolley Line Trail along Rhode Island Avenue.

Comment: The sidewalk proposed along Branchville Road will connect with the surrounding sidewalk system.

d. Sidewalks should be clear and free of any obstructions.

Comment: The sidewalk proposed will be clear of obstructions.

e. Crosswalks should be provided at all street crossings. Crosswalks should be painted or delineated with a change in paving material, such as brick pavers.

Comment: A crosswalk will be provided if deemed necessary by the appropriate agency.

Development and Design Guidelines: Landscape Plantings:

a. A street tree program should be organized and implemented by the City of College Park and the North College Park Citizens Association throughout the entire residential neighborhood to provide shade and improve the overall beauty of the neighborhood with a consistent, vegetated street edge. Strategies to fund a street tree planting program, such as donations, grants and taxing, should be explored with the civic association and city representatives.

Comment: This street tree program will be utilized if it exists at the time of Detailed Site Plan.

b. Tree spacing shall be consistent on each individual street with some allowance for conflicts with drive entrances, alleys and underground services. Street trees should be planted, an average of 30 feet on center, on all streets in accordance with Prince

George's County DPW&T and Maryland Department of Natural Resources (MDNR) standards and the Prince George's County Landscape Manual.

Comment: Street trees will be planted in such a manner.

c. A tree planting effort should be implemented in North College Park along the northwestern edge adjacent to the station platform. Ideally, this tree planting effort should be initiated prior to construction at the station site to effectively screen any development occurring in the North Core Area. A mix of deciduous and evergreen trees should be planted to buffer the neighborhood and contextually fit with the existing neighborhood character.

Comment: This area does not pertain to the subject site.

6.0 Conclusion:

By phasing out the existing industrial use and developing this property into an ezStorage, it fulfills the intent of the General Plan, Approved Sector Plan and Sectional Map Amendment for the Greenbelt Metro Area, and the Subtitle 27 guidelines. This proposal will eliminate an undesired industrial use and replace it with a facility that local residents and businesses can use. The proposed development will make efficient use of the existing I-2 zoned land and existing surrounding infrastructure. Not only will this proposal enhance the quality and character of the site proper, but it will enhance the quality and character of the surrounding neighborhoods and Sector Plan.

SOLTESZ, INC.

_____

Greg Micit, Planner

September 28, 2016

Ms. Cynthia Fenton
Maryland-National Capital Park and Planning Commission
14741 Governor Oden Bowie Drive
Upper Marlboro, Maryland 20772

Re: EZ Storage
Detailed Site Plan DSP-15031
Soltesz No. 1577-06-00

Dear Cynthia:

The following information is provided pursuant to the need to apply for a variance from Prince George's County Code Sections 27-474 (a) Table of Uses, (b) Table 1 Setbacks, I-2 From Street in general 25 feet. Concerning Section Sections 27-474 (a) & (b) there is approximately 114 feet of the proposed building that does not meet the required 25 foot building setback from the street right of way. A street right-of-way is measured form either the existing right-of-way or the master planned right-of-way, whichever greater.

With this request for a variance, we intend to describe the property as it exists, describe the proposed application, and to justify the need for a variance in accordance with M-NCPPC requirements.

The Subject Property is located in Subregion 2, College Park-Berwyn Heights and Vicinity. The site is bounded on the south by Maryland State Highway 193- Greenbelt Road, on the east by a CXS right-of-way, on the north by Branchville Road, and on the west by existing development.
The present facility consists of a Hydra Lift Industrial Truck service garage. The property has existed in its current form since the completion of the existing building in 1951. The site will feature a high quality design that will coincide with adjacent industrial and service uses. The property has been envisioned for redevelopment since the Approved Sector Plan and Sectional Map Amendment for the Greenbelt Metro Area was adopted in 2001. The present proposal is to construct an ezStorage facility with surface parking.

As required by Section 27-230(a-c), we offer the following:

(a) A variance may only be granted when the District Council, Zoning Hearing Examiner, Board of Appeals, or the Planning Board as applicable, finds that:

(1) A specific parcel of land has exceptional narrowness, shallowness, or shape, exceptional topographic conditions, or other extraordinary situations or conditions;

Response: **This property has been developed since the 1950's. It is at the edge of a well –developed industrial area. Development is limited by the existing CSX tracks which are adjacent to the site on the east and a State Highway on the south. This property is subject to the County's 100-year floodplain which creates conditions where adequate area is needed to allow for the conveyance of water to continue through the site and enough area for compensatory storage. There is an existing easement granted to the State**

Highway Administration for drainage which is located in the southern portion of the site. Since MD 193 is approximately 30 feet above the proposed development, this area is needed for the purpose of providing drainage for the site, adjacent site, and the road. In addition, Branchville Road ends at the CSX property line. One could make the assumption that Branchville Road will not be extended across the rail line in any near or distant future. With these factors considered, the building was shifted northward towards Branchville Road to allow adequate space for the drainage and compensatory storage. These conditions create an environment that is unique to the property and generally not applicable to other properties. It also restricts development by almost 10% of the site due to these existing conditions.

(2) The strict application of this Subtitle will result in peculiar and unusual practical difficulties to, or exceptional or undue hardship upon, the owner of the property; and

Response: **The strict application of the Subtitle will result in extreme hardship on the owner since a denial will render the property economically nonviable. The strict application will also make it difficult to achieve the General Plan and purposes and goals of the I-2 Industrial zone. Having less square footage or storage units will not offset the construction costs of the building. The ratio of units to the construction cost is imbalanced by the decrease of units and would cause building costs to increase for less units to the point that the construction cannot be supported number of units.**

(3) The variance will not substantially impair the intent, purpose, or integrity of the General Plan or Master Plan.

Response: **The granting of this variance will not impair the intent, purpose, or integrity of the General Plan or I-2 zoning. Rather, the approval of this variance will allow the property to continue to act as a part of a commercial/ industrial center along Branchville Road, thus contributing to the General Plan's goal of providing increased opportunities for redevelopment.**

(b) Variances from the requirements of Subtitle 5B of this Code for property located within the Chesapeake Bay Critical Area Overlay Zones shall only be approved by the Planning Board where an appellant demonstrates that provisions have been made to minimize any adverse environmental impact of the variance and where the Prince George's County Planning Board has found, in addition to the findings set forth in Subsection (a), including (1-9)

Response: **This property is not in the Chesapeake Bay Critical Area Overlay Zone, therefore, this section is not applicable.**

(c) For properties in the R-30, R-30C, R-18, R-18C, R-10A, R-10, and R-H Zones, where the applicant proposes development of multifamily dwellings and also proposes that the percentage of dwelling units accessible to the physically handicapped and aged will be increased above the minimum number of units required by Subtitle 4 of the Prince George's County Code, the Board of Appeals may consider this increase over the required number of accessible units in making its required findings.

Response: This property is not in the above mentioned Zones, therefore, this section is not applicable.

In conclusion, we are respectfully request relief from strict compliance to Prince George's County Code Sections 27-474 (a) Table of Uses, (b) Table 1 Setbacks,
In particular,

1) Table 1, I-2 From Street in general 25 feet to allow a building to be closer to the street than 25 feet.

Should you have any further questions, please do not hesitate to contact our office.

Sincerely,

Soltesz, LLC

David J. Bickel
Planning Director

September 28, 2016

Ms. Katina Shoulars
Supervisor
Environmental Planning Section
Maryland-National Capital Park and Planning Commission
14741 Governor Oden Bowie Drive
Upper Marlboro, MD 20772

Re: ezStorage College Park
Detailed Site Plan: DSP-15031
TCPII: Pending
NRI: NRI-207-15
Soltesz No.: 1577-06-00

Dear Katina,

The following information is provided pursuant to the need to supply a Letter of Justification for impacts to regulated environmental features as defined in Subtitle 24 of the Subdivision Ordinance. The intent of the request is to document the extent of the impact of the Primary Management Area (PMA) and provide justification for this impact in accordance with M-NCPPC requirements.

Description and Location of the Subject Property
The subject property is located at 5151 Branchville Road, College Park, MD 20740, approximately 1150' east of its intersection with Rhode Island Ave. and Greenbelt Road. It is zoned I-2 and is 1.82 acres in size.

General Description of Proposed Use and the Request
This application includes a request for approval of impacts to regulated environmental features totaling 1.62 acres (70,341 sf). The impacts are to the floodplain. Most of the impacts occur only where there are already impacts, in the form of existing pavement and building. New impacts are proposed primarily along the southern portion of the site, yet there are additional impacts to the northern and eastern portion of the site. The new impact on the southern portion of the site is necessary for the proposed ezStorage building to fit on the site. The impact to the northern portion of the site is necessary to provide access from Branchville Road and parking. The rest of the proposed impacts are necessary to accommodate all new on-site development and infrastructure including buildings, pavement, etc. All of these impacts will be permanent.

Description of Existing Regulated Environmental Features On-Site
The site contains a total of 1.62 acres of PMA. The PMA comprises 1.62 acres of floodplain, and areas of steep slopes. The PMA is generally located central to the site, but takes up most of the gross tract. The existing PMA is 89% of the total site area. The PMA located on the southern portion of the property contains the steep slopes area. There are steep slopes here because of the grading change from the site to Greenbelt Road, which begins to cross over the CSX lines which border the site to the east. Within the steep slopes on-site is also woodland that is approximately 50' to 70' wide that encroaches into the Greenbelt Road right-of-way. This woodland serves as a buffer between the site and the Greenbelt Road. The PMA has almost

entirely been impacted by previous development of the site.

Description of Applicable Code
Section 24-130(b)(5):
"Where a property is located outside the Chesapeake Bay Critical Areas Overlay Zones the preliminary plan and all plans associated with the subject application shall demonstrate the preservation and/or restoration of regulated environmental features in a natural state to the fullest extent possible consistent with the guidance provided by the Environmental Technical Manual established by Subtitle 25. Any lot with an impact shall demonstrate sufficient net lot area where a net lot area is required pursuant to Subtitle 27, for the reasonable development of the lot outside the regulated feature. All regulated environmental features shall be placed in a conservation easement and depicted on the final plat."

Specific Description of Proposed Impacts and Justification of Avoidance and Minimization

Impact to PMA in its entirety:
This impact is 70,341 square feet of PMA disturbance for all site development and infrastructure needs including buildings, roads, stormdrain, water, sewer, etc. The site is undevelopable without impacts to the PMA, which is made up of floodplain. The impact is proposed because most of the land existing within this PMA has already been developed. Most of the proposed impact to this PMA exists where the PMA has already been impacted. In fact, 85% of the 70,341 sf of impact has already been impacted by previous development. Avoidance and minimization have been strived for by reducing additional impact to areas of the PMA that have not been previously impacted. Only 15% of the total PMA impact for this property is new impact. In addition, the redevelopment of the site will include stormwater management and bio-retention practices that will help improve water quality. Since none of these measures currently exist on-site, the water quality will be drastically improved with the proposed development.

Complete avoidance of the floodplain is not achievable with any form of development of the site. Therefore, measures have been taken to minimize the impacts to the floodplain, although drastically minimizing impacts is not realistic. This is because 89% of the site is located within the floodplain. Minimization of impacts has been achieved by placing proposed site infrastructure on areas not containing floodplain, to the extent practical. Where this was not achievable, the design team strove to place infrastructure impacts on areas of the site that have been previously developed with building, roads, parking, etc. Preservation and restoration of the floodplain is also not realistically achievable, but measures have been taken to not cause other environmental hardships to the site and surrounding areas. Bio-retention facilities will be constructed to treat stormwater run-off from the site before it enters the surrounding ecosystem. Since no bio-retention facilities currently exist on-site, this will drastically improve the water quality of water entering the adjacent environment.

Sincerely,

Soltesz, Inc.

David Bickel, RLA
Director of Planning

DETAILED SITE PLAN
EZ STORAGE COLLEGE PARK
5151 BRANCHVILLE ROAD
COLLEGE PARK, MARYLAND

SCALE: 1" = 50'

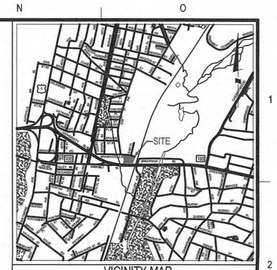

VICINITY MAP
SCALE: 1"=2000'

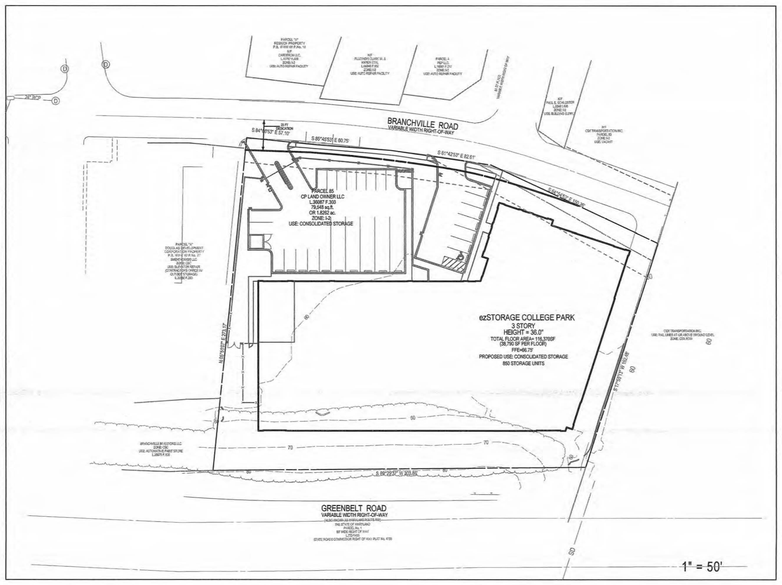

SITE NOTES

1. OBSTRUCTIONS SHOWN ON THIS DRAWING ARE FOR THE CONVENIENCE OF THE CONTRACTOR ONLY AND LOIEDERMAN SOLTESZ ASSOCIATES, INC. DOES NOT WARRANT OR GUARANTEE THE CORRECTNESS OR THE COMPLETENESS OF THE INFORMATION GIVEN. THE CONTRACTOR MUST VERIFY SUCH INFORMATION TO HIS SATISFACTION.

2. SHOULD THE CONTRACTOR DISCOVER ANY DISCREPANCIES BETWEEN THE PLANS AND FIELD CONDITIONS, THE ENGINEER SHALL BE NOTIFIED IMMEDIATELY TO RESOLVE THE SITUATION. SHOULD THE CONTRACTOR MAKE FIELD CORRECTIONS OR ADJUSTMENTS WITHOUT NOTIFYING THE ENGINEER, THE CONTRACTOR ASSUMES ALL RESPONSIBILITY FOR THOSE CHANGES.

3. IT SHALL BE THE RESPONSIBILITY OF THE CONTRACTOR TO NOTIFY THE ENGINEER OF ANY DEVIATION FROM THE PLANS PRIOR TO ANY CHANGE BEING MADE. ANY DEVIATION OF THE PLAN WITHOUT THE WRITTEN AUTHORIZATION FROM THE ENGINEER WILL BE THE RESPONSIBILITY OF THE CONTRACTOR.

4. NO CLEARING, GRADING OR CONSTRUCTION IS PERMITTED WITHIN THE REQUIRED WETLANDS, STREAMS, OR THEIR BUFFERS AND FOREST CONSERVATION EASEMENTS, EXCEPT AS APPROVED PER THE TREE CONSERVATION PLAN.

5. THIS PLAN WAS PREPARED IN ACCORDANCE WITH THE PROVISIONS OF SECTION 27 OF THE PRINCE GEORGE'S COUNTY CODE AND THE LANDSCAPE MANUAL.

6. UNLESS OTHERWISE NOTED, THE EXISTING TOPOGRAPHY IS TAKEN FROM AERIAL SURVEY WITH A CONTOUR INTERVAL OF TWO FEET, VARIOUS FIELD SURVEYS DONE BY LOIEDERMAN SOLTESZ ASSOCIATES, INC. AND DESIGN GRADES FROM PRIOR CONSTRUCTION PHASES. PRIOR TO BEGINNING CONSTRUCTION OF FACILITIES IN ANY GIVEN SITE AREA, THE CONTRACTOR SHALL VERIFY TIE-IN ELEVATIONS SHOWN ON THESE PLANS, AS REQUIRED.

7. ALL CONSTRUCTION SHALL BE IN ACCORDANCE WITH THE LATEST STANDARDS AND SPECIFICATIONS OF PRINCE GEORGE'S COUNTY DPW&T PLUS MSHA STANDARDS AND SPECIFICATIONS IF APPLICABLE.

8. THE CONTRACTOR SHALL NOTIFY "MISS UTILITY" AT 1-800-257-7777 AT LEAST 48 HOURS PRIOR TO ANY EXCAVATION WORK BEING DONE.

9. TRAFFIC CONTROL DEVICES, MARKINGS, AND SIGNING SHALL BE IN ACCORDANCE WITH THE LATEST EDITION OF THE MANUAL OF UNIFORM TRAFFIC CONTROL DEVICES (MUTCD). ALL STREET AND REGULATORY SIGNS SHALL BE IN PLACE PRIOR TO THE PLACEMENT OF ANY ASPHALT. ALL PLAN DIMENSIONS ARE TO FACE OF CURB UNLESS OTHERWISE NOTED.

10. THE COORDINATES SHOWN HEREON ARE BASED UPON THE MARYLAND STATE PLAN COORDINATE SYSTEM.

11. EXISTING UTILITIES ARE BASED ON FIELD SURVEYS AND AVAILABLE RECORD DRAWINGS AND DESIGNED UTILITIES FROM PRIOR CONSTRUCTION PHASES. THE CONTRACTOR SHALL FIELD VERIFY TIE-IN ELEVATION PRIOR TO CONSTRUCTION AND NOTIFY THE ENGINEER OF ANY DISCREPANCIES.

12. CONTRACTOR SHALL COMPLY WITH THE CURRENT EDITION OF THE ADA DISABILITIES ACT GUIDELINES.

13. TRASH RECEPTACLES AND THE DUMPSTER SHALL BE EMPTIED AS NEEDED AND THE SITE AND ITS LANDSCAPING SHALL BE REGULARLY MAINTAINED. ALL DUST FREE SURFACES SHALL BE WASHED AND SWEPT AS NEEDED.

GENERAL NOTES

1. SUBDIVISION NAME: ezSTORAGE COLLEGE PARK
2. GROSS ACREAGE: 79,548 SQ.FT. OR 1.82 AC.
   FLOODPLAIN ACREAGE: 1.62 AC.
   NET ACREAGE: 78,279 SQ.FT. OR 1.82 AC.
3. EXISTING ZONE: I-2
4. PROPOSED USE: CONSOLIDATED STORAGE
   a. 850 STORAGE UNITS
   b. 1200 S.F. OFFICE
5. PROPOSED NUMBER OF
   a. LOTS: 0
   b. PARCELS: 1 (PARCEL 85: L.36087 F.303)
   c. OUTLOTS: 0
   d. OUTPARCELS: 0
6. GROSS FLOOR AREA:
   EXISTING: 21,378 S.F.
   PROPOSED: 116,370 S.F.
7. WSSC GRID: 210NE05
8. TAX MAP: 25 F4
9. AVIATION POLICY AREA: NOT WITHIN
10. EXISTING
    a. WATER DESIGNATION: W-3
    b. SEWER DESIGNATION: S-3
11. PROPOSED
    a. WATER DESIGNATION: W-3
    b. SEWER DESIGNATION: S-3
12. STORMWATER CONCEPT APPROVAL # 41022-2015
13. 10-FOOT PUBLIC UTILITY EASEMENT ALONG ALL RIGHTS-OF-WAY
14. MANDATORY PARK DEDICATION NOT APPLICABLE.
15. NO CEMETERIES EXIST ON OR CONTIGUOUS TO PROPERTY.
16. NO HISTORIC SITES ON OR IN THE VICINITY OF THE PROPERTY.
17. A STREAM IS NOT ON SITE.
18. 100-YEAR FLOODPLAN IS ON SITE.
19. SITE IS NOT WITHIN CHESAPEAKE BAY CRITICAL AREA
20. SOURCE OF TOPOGRAPHY: SOLTESZ
21. EXISTING BUILDING ON SITE TO BE DEMOLISHED TO FLOOR SLAB. EX. FLOOR SLAB TO BE INCOPORATED IN NEW BUILDING.
22. APPLICANT:

    SIENA CORPORATION
    8221 SNOWDEN RIVER PARKWAY
    COLUMBIA, MARYLAND 21045
    OFFICE: (443) 539-3070
    FAX: (410) 299-7897

    CONTACT PERSON: CRAIG PITTINGER

SITE DATA

1. ZONE: I-2
2. PARCEL A :1.78 AC
3. SET BACK:
   FRONT: 25'
   SIDE: 30' (ONE OR TWO SIDE YARDS FOR A TOTAL OF 30')
   REAR: NONE
4. LOT COVERAGE:
   REQUIRED: 90% OF NET LOT AREA
   PROVIDED: 65.9%
   GREEN AREA COVERAGE:
   REQUIRED: 10% OF NET LOT AREA
   PROVIDED: 32%
5. BUILDING CALCULATION:
   LEVEL 1 = 35,545 SF
   LEVEL 2 = 37,951 SF
   LEVEL 3= 37,951 SF
   TOTAL FLOOR AREA = 111,447 SF

LEGEND

- BOUNDARY LINE
- EXISTING CONTOURS
- EXISTING SEWER
- EASEMENT
- PROPOSED LOT LINE
- LIMIT OF DISTURBANCE
- PROPOSED CONTOURS
- PROPOSED STORM DRAIN
- PROPOSED WATER LINE
- PROPOSED SEWER LINE

BUILDING MOUNTED SIGNS

SIGNS	ALLOWED	PROPOSED	TOTAL
EZ STORAGE: 103.66 S.F. X 3 CLIMATE CONTROLLED 55 S.F. X 1 SELF-STORAGE: 34 S.F. X 1		311 S.F. 55 S.F. 34 S.F.	
	400 S.F.		400 S.F.

PARKING AND LOADING

PARKING SPACES	REQUIRED	PROPOSED
STANDARD SPACES (9.5'X19'): 850 STORAGE (1/50) OFFICE:1,200 SF (4/1000) RES.MANAGER	17 5 2	17 5 2
ADA PARKING (8'X19'): TOTAL	24	24
LOADING SPACE (18'X33'): 116,370 SF 2 UPTO 10,000 SF 1/40,000 OVER	5	5

PAVING MATERIAL: ASPHALT
PARKING STRIPING MATERIAL: PERMANENT PAINT

ENGINEER'S CERTIFICATION

I HEREBY CERTIFY THAT THIS PLAN CONFORMS TO SUBTITLE 32, DIVISION 2 OF THE PRINCE GEORGE'S COUNTY BUILDING CODE.

DATE:

TIMOTHY H. DAVIS RLA, AICP
MD.RLA.NO.2002

DRAINAGE CERTIFICATION

I CERTIFY THAT I HAVE INSPECTED THIS SITE AND THAT DRAINAGE ONTO THIS SITE FROM UPGRADE PROPERTIES AND FROM THIS SITE ONTO OTHER DOWNGRADE PROPERTIES HAS BEEN ADDRESSED IN SUBSTANTIAL ACCORDANCE WITH APPLICABLE CODES.

DATE:

TIMOTHY H. DAVIS RLA, AICP
MD. RLA. NO. 2002

GRAPHIC SCALE 1" = 50'
50 25 0 50 100

THIS BLOCK IS FOR OFFICIAL USE ONLY
QR label certifies that this plan meets conditions of final approval by the Planning Board, its designee or the District Council.
M-NCPPC
APPROVAL

PROJECT NAME: EZ STORAGE COLLEGE PARK
PROJECT NUMBER: DSP - 15031

For Conditions of Approval see Site Plan Cover Sheet or Approval Sheet Revision numbers must be included in the Project Number

SOLTESZ
Engineering
Surveying
Planning
Environmental Sciences

LANHAM OFFICE
4300 Forbes Boulevard, Suite 230
Lanham, MD 20706
P. 301.794.7555 F. 301.794.7656

Rockville
Lanham
Waldorf
Leonardtown
Frederick
Soltesz DC, LLC

www.solteszco.com

NO.	REVISIONS	BY	DATE

DATE: AUGUST 2015 | CAD STANDARDS VERSION: V8 - 2000
DESIGNED: YOR | TECHNICIAN: YOR | CHECKED: THD

MISS UTILITY NOTE

INFORMATION CONCERNING EXISTING UNDERGROUND UTILITIES WAS OBTAINED FROM AVAILABLE RECORDS. THE CONTRACTOR MUST DETERMINE THE EXACT LOCATION AND ELEVATION OF ALL EXISTING UTILITIES AND UTILITY CROSSINGS BY DIGGING TEST PITS BY HAND, WELL IN ADVANCE OF THE START OF EXCAVATION. CONTACT "MISS UTILITY" AT 1-800-257-7777, 48 HOURS PRIOR TO THE START OF EXCAVATION. IF CLEARANCES ARE LESS THAN SHOWN ON THIS PLAN OR TWELVE (12) INCHES, WHICHEVER IS LESS, CONTACT THE ENGINEER AND THE UTILITY COMPANY BEFORE PROCEEDING WITH CONSTRUCTION. CLEARANCES LESS THAN NOTED MAY REQUIRE REVISIONS TO THIS PLAN.

OWNER/DEVELOPER/APPLICANT

SIENA CORPORATION
8221 SNOWDEN RIVER PARKWAY
COLUMBIA, MARYLAND 21045

OFFICE: (443) 539-3070

CONTACT NAME: CRAIG PITTINGER

MAP _____ GRID _____

TAX MAP	ZONING CATEGORY:
25, F4	I-2
WSSC 200' SHEET	XXXX:
210NE05	XXXX
SITE DATUM HORIZONTAL: XXXXXX VERTICAL: XXXXXX	XXXX:
	XXXX

STATE OF MARYLAND DAVID JOHN BERNARD III 9-28-16 REGISTERED PROFESSIONAL ENGINEER

COVER SHEET

DETAILED SITE PLAN
EZ STORAGE COLLEGE PARK
5151 BRANCHVILLE ROAD
COLLEGE PARK, MARYLAND
BERWIN (21th) ELECTION DISTRICT, PRINCE GEORGE'S COUNTY, MARYLAND

1" = 50'
SHEET 1 OF 4
PROJECT NO. 15770600

The original of this drawing document was prepared by Soltesz, Inc. (SOLTESZ). If this document was not obtained directly from SOLTESZ and/or it was transmitted electronically, SOLTESZ cannot guarantee that unauthorized changes and / or alterations were not made by others. If verification of this information contained hereon is needed, contact should be made directly with SOLTESZ. SOLTESZ makes no warranties, express or implied, concerning the accuracy of any information that has been transmitted by electronic means.

P:\15770600\ENGINEER\SITE\SI01.sht Scale= 50.0000 ft / in. User= yroh PLTdrv= PDF_Grey_150.pltcfg Pentbl= TEXT_SUB.tbl 9/28/2016 2:21:37 PM

The original of this drawing document was prepared by Soltesz, Inc. (SOLTESZ). If this document was not obtained directly from SOLTESZ and/or it was transmitted electronically, SOLTESZ cannot guarantee that unauthorized changes and / or alterations were not made by others. If verification of the information contained hereon is needed, contact should be made directly with SOLTESZ. SOLTESZ makes no warranties, express or implied, concerning the accuracy of any information that has been transmitted by electronic means.

REFERENCE GRID A B C D E F G H I J K L M N O

1 2 3 4 5 6 7 8 9 10

THIS BLOCK IS FOR OFFICIAL USE ONLY

OR label certifies that this plan meets conditions of final approval by the Planning Board, its designee or the District Council.

M-NCPPC

APPROVAL

PROJECT NAME: EZ STORAGE COLLEGE PARK

PROJECT NUMBER: DSP - 15031

For Conditions of Approval see Site Plan Cover Sheet or Approval Sheet. Revision numbers must be included in the Project Number

APPROVAL SHEET

DETAILED SITE PLAN

EZ STORAGE COLLEGE PARK

5151 BRANCHVILLE ROAD
COLLEGE PARK, MARYLAND

BERWIN (21th) ELECTION DISTRICT, PRINCE GEORGE'S COUNTY, MARYLAND

1" = 20'

SHEET 2 OF 4

PROJECT NO. 15770600

STATE OF MARYLAND THOMAS JOHN BERGER No. 30000 LICENSED LANDSCAPE ARCHITECT

9-2016

SOLTESZ

Engineering
Surveying
Planning
Environmental Sciences

LANHAM OFFICE
4300 Forbes Boulevard, Suite 230
Lanham, MD 20706
P. 301.794.7555 F. 301.794.7656

Rockville
Lanham
Waldorf
Leonardtown
Frederick
Soltesz DC, LLC

www.solteszco.com

NO.	REVISIONS	BY	DATE

DATE: AUGUST 2015 | CAD STANDARDS VERSION: V8 - 2000

DESIGNED: YOR | TECHNICIAN: YOR | CHECKED: THD

MISS UTILITY NOTE

INFORMATION CONCERNING EXISTING UNDERGROUND UTILITIES WAS OBTAINED FROM AVAILABLE RECORDS. THE CONTRACTOR MUST DETERMINE THE EXACT LOCATION AND ELEVATION OF ALL EXISTING UTILITIES AND UTILITY CROSSINGS BY DIGGING TEST PITS BY HAND, WELL IN ADVANCE OF THE START OF EXCAVATION. CONTACT "MISS UTILITY" AT 1-800-257-7777, 48 HOURS PRIOR TO THE START OF EXCAVATION. IF CLEARANCES ARE LESS THAN SHOWN ON THIS PLAN OR TWELVE (12) INCHES, WHICHEVER IS LESS, CONTACT THE ENGINEER AND THE UTILITY COMPANY BEFORE PROCEEDING WITH CONSTRUCTION. CLEARANCES LESS THAN NOTED MAY REQUIRE REVISIONS TO THIS PLAN.

OWNER/DEVELOPER/APPLICANT

SIENA CORPORATION
8221 SNOWDEN RIVER PARKWAY
COLUMBIA, MARYLAND 21045

OFFICE: (443) 539-3070

CONTACT NAME: CRAIG PITTINGER

MAP	GRID
TAX MAP: 25, F4	ZONING CATEGORY: I-2
WSSC 200' SHEET: 210NE05	XXXX: XXXX
SITE DATUM HORIZONTAL: XXXXXX VERTICAL: XXXXXX	XXXX: XXXX

P:\15770600\ENGINEER\SITE\Sit02.sht Scale= 20.0000 ft / in. User= yroh PLTdrv= PDF_Grey_150.pltcfg Pentbl= TEXT_SUB.tbl 9/28/2016 1:00:20 PM

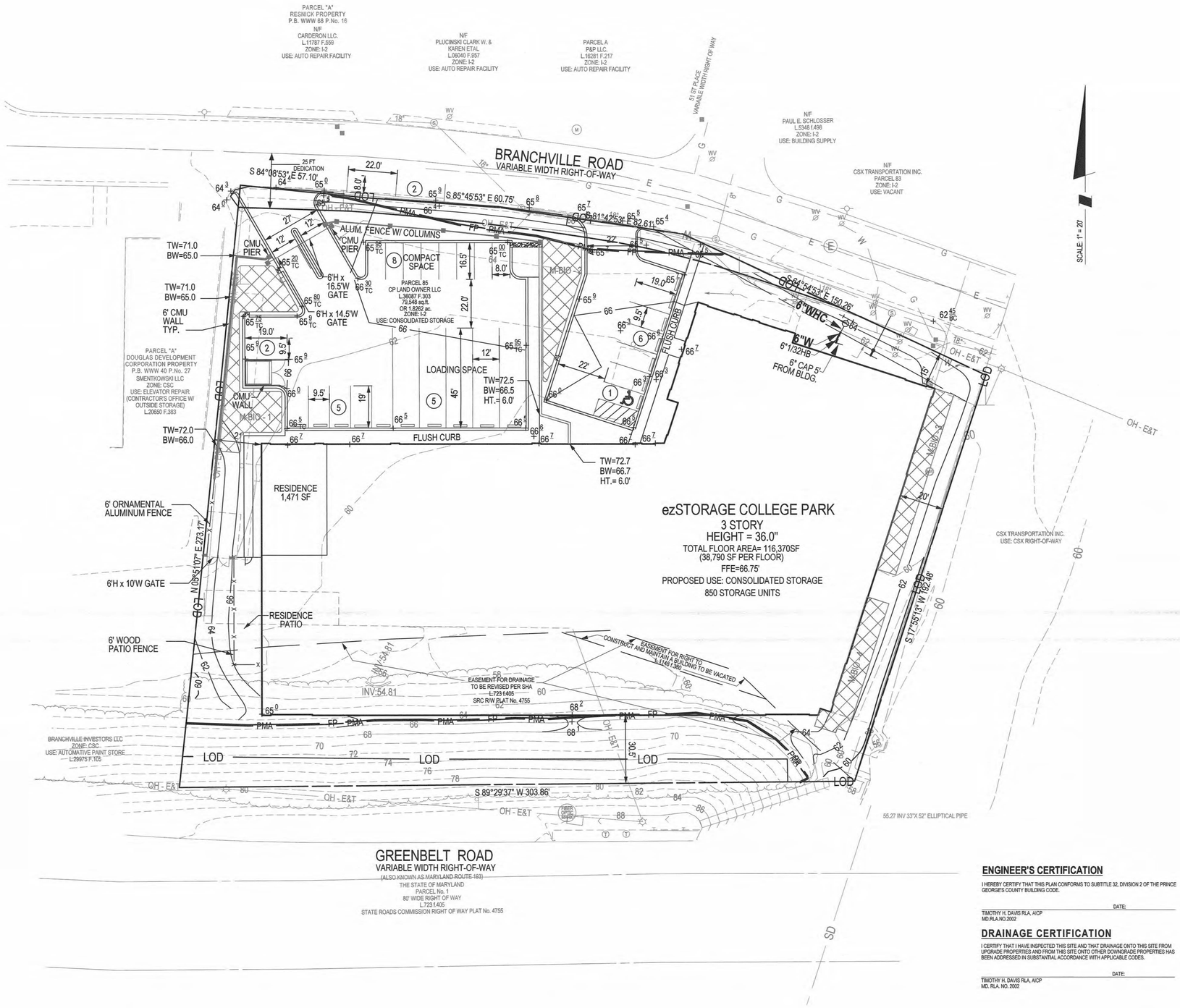

LEGEND

- BOUNDARY LINE
- EXISTING CONTOURS
- EXISTING SEWER
- EASEMENT
- PROPOSED LOT LINE
- LIMIT OF DISTURBANCE
- PROPOSED CONTOURS
- PROPOSED STORM DRAIN
- PROPOSED WATER LINE
- PROPOSED SEWER LINE

ENGINEER'S CERTIFICATION

I HEREBY CERTIFY THAT THIS PLAN CONFORMS TO SUBTITLE 32, DIVISION 2 OF THE PRINCE GEORGE'S COUNTY BUILDING CODE.

DATE:

TIMOTHY H. DAVIS RLA, AICP
MD.RLA.NO.2002

DRAINAGE CERTIFICATION

I CERTIFY THAT I HAVE INSPECTED THIS SITE AND THAT DRAINAGE ONTO THIS SITE FROM UPGRADE PROPERTIES AND FROM THIS SITE ONTO OTHER DOWNGRADE PROPERTIES HAS BEEN ADDRESSED IN SUBSTANTIAL ACCORDANCE WITH APPLICABLE CODES.

DATE:

TIMOTHY H. DAVIS RLA, AICP
MD. RLA. NO. 2002

GRAPHIC SCALE 1" = 20'

20 10 0 20 40

THIS BLOCK IS FOR OFFICIAL USE ONLY

OR label certifies that this plan meets conditions of final approval by the Planning Board, its designee or the District Council.

M-NCPPC APPROVAL

PROJECT NAME: EZ STORAGE COLLEGE PARK

PROJECT NUMBER: DSP - 15031

For Conditions of Approval see Site Plan Cover Sheet or Approval Sheet Revision numbers must be included in the Project Number

PLAN VIEW

DETAILED SITE PLAN

EZ STORAGE COLLEGE PARK

5151 BRANCHVILLE ROAD
COLLEGE PARK, MARYLAND

BERWIN (21b) ELECTION DISTRICT, PRINCE GEORGE'S COUNTY, MARYLAND

1" = 20'

SHEET 3 OF 4

PROJECT NO. 15770600

SOLTESZ

Engineering
Surveying
Planning
Environmental Sciences

LANHAM OFFICE
4300 Forbes Boulevard, Suite 230
Lanham, MD 20706
P. 301.794.7555 F. 301.794.7656

Rockville
Lanham
Waldorf
Leonardtown
Frederick
Soltesz DC, LLC

www.solteszco.com

NO.	REVISIONS	BY	DATE

DATE: AUGUST 2015 | CAD STANDARDS VERSION: V8 - 2000
DESIGNED: YOR | TECHNICIAN: YOR | CHECKED: THD

MISS UTILITY NOTE

INFORMATION CONCERNING EXISTING UNDERGROUND UTILITIES WAS OBTAINED FROM AVAILABLE RECORDS. THE CONTRACTOR MUST DETERMINE THE EXACT LOCATION AND ELEVATION OF ALL EXISTING UTILITIES AND UTILITY CROSSINGS BY DIGGING TEST PITS BY HAND, WELL IN ADVANCE OF THE START OF EXCAVATION. CONTACT "MISS UTILITY" AT 1-800-257-7777, 48 HOURS PRIOR TO THE START OF EXCAVATION. IF CLEARANCES ARE LESS THAN SHOWN ON THIS PLAN OR TWELVE (12) INCHES, WHICHEVER IS LESS, CONTACT THE ENGINEER AND THE UTILITY COMPANY BEFORE PROCEEDING WITH CONSTRUCTION. CLEARANCES LESS THAN NOTED MAY REQUIRE REVISIONS TO THIS PLAN.

OWNER/DEVELOPER/APPLICANT

SIENA CORPORATION
8221 SNOWDEN RIVER PARKWAY
COLUMBIA, MARYLAND 21045

OFFICE: (443) 539-3070

CONTACT NAME: CRAIG PITTINGER

MAP	GRID
TAX MAP 25, F4	ZONING CATEGORY: I-2
WSSC 200' SHEET 210NE05	XXXX: XXXX
SITE DATUM HORIZONTAL: XXXXXX VERTICAL: XXXXXX	XXXX: XXXX

STATE OF MARYLAND LAND JOHN BERGER PROFESSIONAL ENGINEER 9-21-16 SOLTESZ ARCHITECTS

The original of this drawing document was prepared by Soltesz, Inc. (SOLTESZ). If this document was not obtained directly from SOLTESZ and/or it was transmitted electronically, SOLTESZ cannot guarantee that unauthorized changes and/ or alterations were not made by others. If verification of the information contained hereon is needed, contact should be made directly with SOLTESZ. SOLTESZ makes no warranties, express or implied, concerning the accuracy of any information that has been transmitted by electronic means.

P:\15770600\ENGINEER\SITE\SI03.sht Scale= 20.0000 ft / in. User= yroh PLTdrv= PDF_Grey_150.pltcfg Pentbl= TEXT_SUB.tbl 9/28/2016 2:22:11 PM

The original of this drawing document was prepared by Soltesz, Inc. (SOLTESZ). If this document was not obtained directly from SOLTESZ and/or it was transmitted electronically, SOLTESZ cannot guarantee that unauthorized changes and / or alterations were not made by others. If verification of the information contained hereon is needed, contact should be made directly with SOLTESZ. SOLTESZ makes no warranties, express or implied, concerning the accuracy of any information that has been transmitted by electronic means.

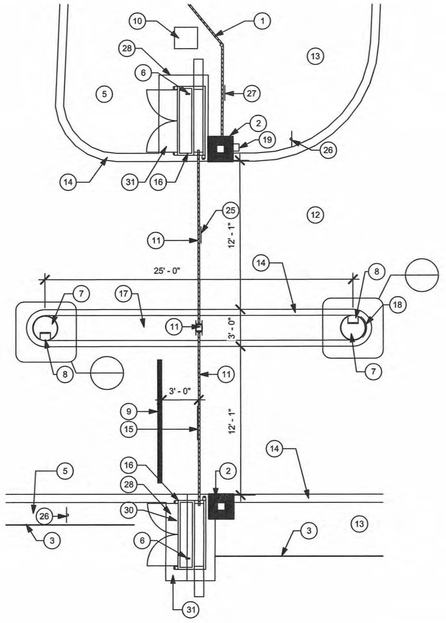

GATE DTAIL

1 6'-0" HIGH ORNAMENTAL FENCE, REFER TO CIVIL DRAWINGS
2 2'-0" x 2'-0" x 6' HIGH RED SPLITFACE CMU PIER W/ PRECAST CONCRETE CAP
3 LINE INDICATES TRAFFIC GUARDRAIL
4 KEYSTONE MODULAR CONCRETE RETAINING WALL, REFER TO HCEA DRAWINGS
5 4" LAYER OF #57 WHITE STONE
6 CONDUIT TO LIFT GATE SHALL TURN UP INSIDE GATE ENCLOSURE. COORDINATE WITH ELECTRICAL DRAWINGS
7 24" DIAMETER SONOTUBE CONCRETE
8 8" x 10" RECESS FOR KEYPAD. PROVIDE CONDUIT & HOLDER FOR KEYPAD. INSTALL CONDUIT IN CONCRETE PER DETAILS.
9 4" WIDE YELLOW PARKING STRIPE ON EXIT SIDE ONLY
10 ELECTRICAL BOXES. COORDINATE WITH ELECTRICAL DRAWINGS
11 6" x 6" x 6'-0" HIGH BLACK STEEL FENCE POST SUPPLIED AND INSTALLED BY FENCE CONTRACTOR. EXTEND BOTTOM OF GATE TO MAINTAIN MAX. 4" GAP BETWEEN PICKETS AND PAVING. YOKES FOR GATES SUPPLIED BY GATE MANUFACTURER.
12 ASPHALT PAVING
13 LANDSCAPED AREA
14 6" CONCRETE CURB. REFER TO CIVIL DRAWINGS
15 SIGNAGE MOUNTED TO GATE. EXT 12A
16 LIFT GATE OPERATOR PER SPECS.
17 6' CONCRETE ISLAND. POUR INTEGRAL WITH THE CURB.
18 SIGN EXT 9
19 KNOX KEY SWITCH AND SIGNAGE FOR FIRE DEPARTMENT ACCESS TO BOTH GATES. SUPPLIED AND INSTALLED BY SECURITY CONTRACTOR
20 DASHED LINE INDICATES FOUNDATION BELOW
21 6" THICK CONCRETE SLAB WITH 6x6xW1.4xW1.4, INSTALL THICKENED EDGE
22 6' HIGH GATE, PROVIDE SHOP DRAWINGS
23 DUMPSTER, N.I.C.
24 6' HIGH, SPLITFACE CMU WALL WITH ARCHITECTURAL PRECAST CAP
25 SIGN EXT 5
26 SIGN EXT 11
27 SIGN EXT6; POINT ARROW TOWARDS OFFICE
28 84"X 48"X 36"DEEP FULL DUG-OUT CONCRETE PAD (3500 PSI) TOP SHALL BE LEVEL WITH TOP OF THE CURB.
29 NOT USED.
30 PROVIDE AN EMERGENCY BUTTON TO OPEN GATE. THIS IS REQUIRED AS PART OF THE EGRESS TO THE PUBLIC WAY
31 7'-0" X 4'-0" CONCRETE PAD

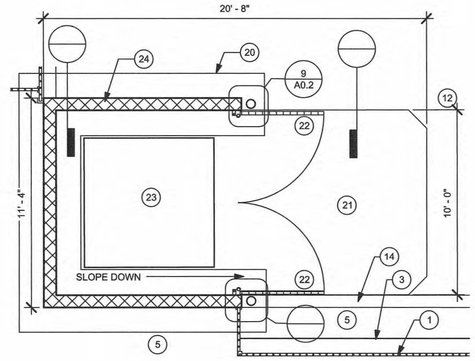

TRASH ENCLOSURE DETAIL

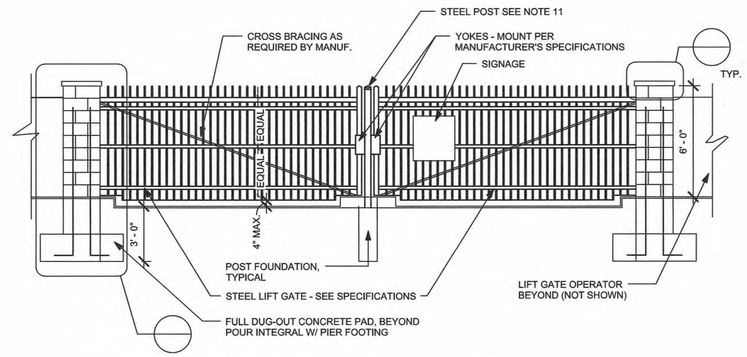

ALL STEEL SHALL BE BLACK TO MATCH ALUMINUM FENCING.

GATE ELEATION

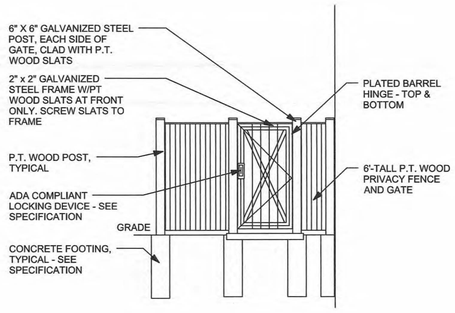

PATIO FENCE & GATE DETAIL

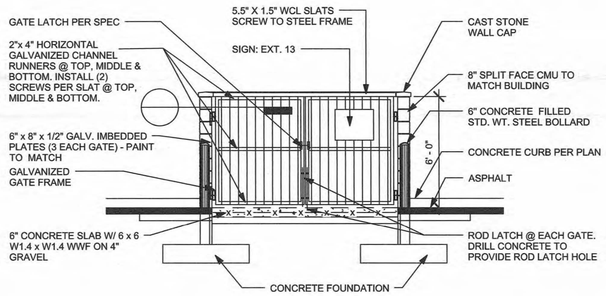

TRASH ENCLOSURE GATE ELEVATION

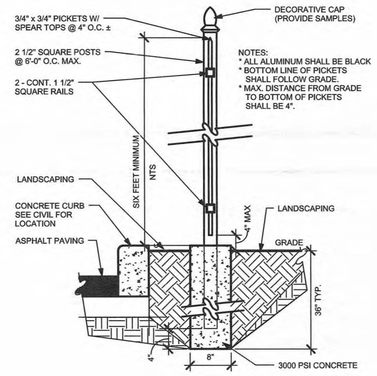

ORNAMENTAL FENCE DETAIL

THIS BLOCK IS FOR OFFICIAL USE ONLY

QR label certifies that this plan meets conditions of final approval by the Planning Board, its designee or the District Council.

M-NCPPC APPROVAL

PROJECT NAME: EZ STORAGE COLLEGE PARK

PROJECT NUMBER: DSP - 15031

For Conditions of Approval see Site Plan Cover Sheet or Approval Sheet Revision numbers must be included in the Project Number

SOLTESZ

Engineering
Surveying
Planning
Environmental Sciences

LANHAM OFFICE
4300 Forbes Boulevard, Suite 230
Lanham, MD 20706
P. 301.794.7555 F. 301.794.7656

Rockville
Lanham
Waldorf
Leonardtown
Frederick
Soltesz DC, LLC

www.solteszco.com

NO.	REVISIONS	BY	DATE

DATE: AUGUST 2015 | CAD STANDARDS VERSION: V8 - 2000
DESIGNED: YOR | TECHNICIAN: YOR | CHECKED: THD

MISS UTILITY NOTE

INFORMATION CONCERNING EXISTING UNDERGROUND UTILITIES WAS OBTAINED FROM AVAILABLE RECORDS. THE CONTRACTOR MUST DETERMINE THE EXACT LOCATION AND ELEVATION OF ALL EXISTING UTILITIES AND UTILITY CROSSINGS BY DIGGING TEST PITS BY HAND, WELL IN ADVANCE OF THE START OF EXCAVATION. CONTACT "MISS UTILITY" AT 1-800-257-7777, 48 HOURS PRIOR TO THE START OF EXCAVATION. IF CLEARANCES ARE LESS THAN SHOWN ON THIS PLAN OR TWELVE (12) INCHES, WHICHEVER IS LESS, CONTACT THE ENGINEER AND THE UTILITY COMPANY BEFORE PROCEEDING WITH CONSTRUCTION. CLEARANCES LESS THAN NOTED MAY REQUIRE REVISIONS TO THIS PLAN.

OWNER/DEVELOPER/APPLICANT

SIENA CORPORATION
8221 SNOWDEN RIVER PARKWAY
COLUMBIA, MARYLAND 21045

OFFICE: (443) 539-3070

CONTACT NAME: CRAIG PITTINGER

MAP _____ GRID _____

TAX MAP	ZONING CATEGORY:
25, F4	I-2
WSSC 200' SHEET	XXXX:
210NE05	XXXX
SITE DATUM	XXXX:
HORIZONTAL: XXXXXX VERTICAL: XXXXXX	XXXX

STATE OF MARYLAND JOHN ROSSI JR. 9-28-16 LICENSED ARCHITECT

DETAIL SHEET

DETAILED SITE PLAN

EZ STORAGE COLLEGE PARK

5151 BRANCHVILLE ROAD
COLLEGE PARK, MARYLAND

BERWIN (21th) ELECTION DISTRICT, PRINCE GEORGE'S COUNTY, MARYLAND

1" = 5'

SHEET 4 OF 4

PROJECT NO. 15770600

P:\15770600\ENGINEER\SITE\SI04.sht Scale= 5.0000 ft / in. User= yroh PLTdrv= PDF_Grey_150.pltcfg Pentbl= TEXT_SUB.tbl 9/28/2016 12:41:56 PM

LANDSCAPE AND LIGHTING PLAN
ezStorage College Park
BERWIN (21th) ELECTION DISTRICT, PRINCE GEORGE'S COUNTY, MARYLAND

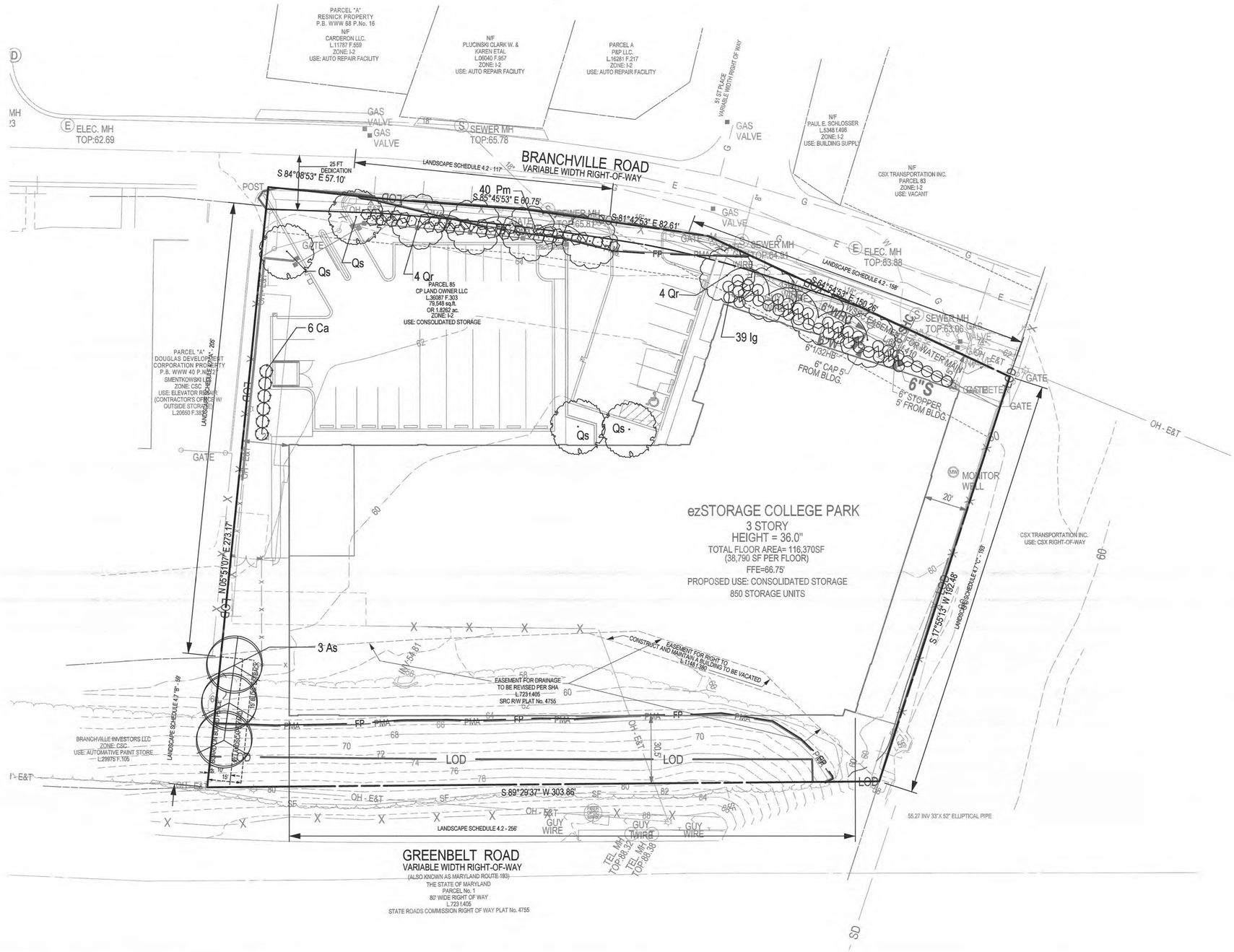

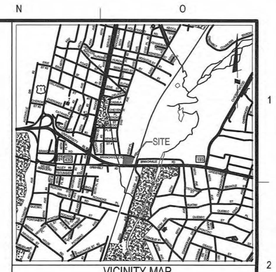

VICINITY MAP
SCALE: 1"=2000'

EZ STORAGE
Site Plant List

Key		Botanical Name	Common Name	Height/Spread	Caliper	Root	Spacing	Remarks
Major Shade Trees								
As	5	Acer saccharum	Sugar Maple	12'-14'	21/2"-3" cal.	B&B	as shown	Native
Qr	8	Quercus rubra	Red Oak	12'-14'	21/2" -3"cal.	B&B	as shown	Native
Qs	4	Quercus shumardii	Shumard Oak	12'-14'	21/2" -3"cal.	B&B	as shown	Non-Native
Evergreen and Deciduous Shrubs								
Ca	6	Callicarpa americana	American Beautybush	18" - 24"		#3 container	as shown	Native
Ig	39	Ilex glabra	Inkberry	18" - 24"		#3 container	as shown	Native
Pm	40	Photinia melanocarpa	Black Chokeberry	18" - 24"		#3 container	as shown	Native

THIS BLOCK IS FOR OFFICIAL USE ONLY

QR label certifies that this plan meets conditions of final approval by the Planning Board, its designee or the District Council.

M-NCPPC
APPROVAL

PROJECT NAME: ezStorage College Park

PROJECT NUMBER: DSP - 15031

For Conditions of Approval see Site Plan Cover Sheet or Approval Sheet. Revision numbers must be indicated in the Project Number

SOLTESZ

Engineering
Surveying
Planning
Environmental Sciences

LANHAM OFFICE
4300 Forbes Boulevard, Suite 230
Lanham, MD 20706
P. 301.794.7555 F. 301.794.7656

Rockville
Lanham
Waldorf
Leonardtown
Frederick
Soltesz DC, LLC

www.soltesz.com

NO.	REVISIONS	BY	DATE

DATE: AUGUST 2015 | CAD STANDARDS VERSION: V8 - 2000
DESIGNED: YOR | TECHNICIAN: YOR | CHECKED: THD

MISS UTILITY NOTE

INFORMATION CONCERNING EXISTING UNDERGROUND UTILITIES WAS OBTAINED FROM AVAILABLE RECORDS. THE CONTRACTOR MUST DETERMINE THE EXACT LOCATION AND ELEVATION OF ALL EXISTING UTILITIES AND UTILITY CROSSINGS BY DIGGING TEST PITS BY HAND. WELL IN ADVANCE OF THE START OF EXCAVATION. CONTACT "MISS UTILITY" AT 1-800-257-7777, 48 HOURS PRIOR TO THE START OF EXCAVATION. IF CLEARANCES ARE LESS THAN SHOWN ON THIS PLAN OR TWELVE (12) INCHES, WHICHEVER IS LESS, CONTACT THE ENGINEER AND THE UTILITY COMPANY BEFORE PROCEEDING WITH CONSTRUCTION. CLEARANCES LESS THAN NOTED MAY REQUIRE REVISIONS TO THIS PLAN.

OWNER/DEVELOPER/APPLICANT

SIENA CORPORATION
8221 SNOWDEN RIVER PARKWAY
COLUMBIA, MARYLAND 21045

OFFICE: (443) 539-3070

CONTACT NAME: CRAIG PITTINGER

MAP XX	GRID XXXXX
TAX MAP 25, F4	ZONING CATEGORY: I-2
WSSC 200' SHEET 210NE05	XXXX: XXXX
SITE DATUM HORIZONTAL: XXXXXX VERTICAL: XXXXXX	XXXX: XXXX

STATE OF MARYLAND
DAVID JOHN DIGGS
No. 9-28-16
PROFESSIONAL ENGINEER

LANDSCAPE AND LIGHTING PLAN
ezStorage College Park
5151 Branchville Road
College Park, Maryland
BERWIN (21th) ELECTION DISTRICT, PRINCE GEORGE'S COUNTY, MARYLAND

1" = 20'

SHEET 1 OF 2

PROJECT NO. 15770600

This original of this drawing document was prepared by Soltesz, Inc. (SOLTESZ). If this document was not obtained directly from SOLTESZ, and/or it was transmitted electronically, SOLTESZ cannot guarantee that unauthorized changes and / or alterations were not made by others. If verification of the information contained hereon is needed, contact should be made directly with SOLTESZ. SOLTESZ makes no warranties, express or implied, concerning the accuracy of any information that has been transmitted by electronic means.

The original of this drawing document was prepared by Soltesz, Inc. (SOLTESZ). If this document was not obtained directly from SOLTESZ and/or it was transmitted electronically, SOLTESZ cannot guarantee that unauthorized changes and / or alterations were not made by others. If verification of the information contained hereon is needed, contact should be made directly with SOLTESZ. SOLTESZ makes no warranties, express or implied, concerning the accuracy of any information that has been transmitted by electronic means.

LANDSCAPE SPECIFICATIONS

A. MATERIALS

1. Plants shall be nursery grown in accordance with good horticultural practice, and grown under climatic conditions similar to those in the locality of the project. They shall have been root pruned, preferably within the last year.

They shall be sound, healthy and vigorous, well branched and densely foliated when in leaf. They shall be free of disease, pest, eggs or larvae, and shall have a healthy developed root system.

Plants shall not be pruned before delivery. Trees with a damaged or crooked leader or multiple leaders, abrasions on the bark, sunscaled, disfiguring knots or fresh cuts over 1?" will be rejected.½" will be rejected.

No change in quantity, size, kind or quality of plant specified will be permitted without approval of the landscape architect.

2. Topsoil shall be fertile, friable and typical of the locality; it shall be free of stones, lumps, plants, roots, sticks and shall not be delivered in a frozen or muddy condition.

3. Planting soil (backfill mix) shall be five-parts topsoil and one-part wet loose peat moss.

4. Staking materials: Guys wire shall be pliable #12 gauge galvanized twisted two-strand wire. Hose shall be a suitable length of two-ply rubber hose inch diameter, stakes shall conform to the detail ¾ inch diameter, stakes shall conform to the detail on this sheet.

5. Wrapping material shall be a standard manufactured tree wrapping paper with crinkled surface and fastened by an approved method.

B. APPLICABLE SPECIFICATIONS AND STANDARDS

1. "Standard Plant Names," latest ediition American Joint Commitee on Horticulture Nominclature.

2. "American Standard of Nursery Stock," latest edition, American Association of Nurseryman.

C. DIGGING AND HANDLING OF PLANT MATERIALS

1. Immediately before digging, spray all evergreen or deciduous plant material in full leaf with anti-dessicant, applying an adequate film over trunks, branches, twigs and/or foliage.

2. Dig balled and burlapped (B&B) plants with firm natural balls of earth, of a diameter not less than that recommended by American Standard for Nursery Stock, and of sufficient depth to include the fibrous and feeding roots. Plants moved with a ball will not be excepted if the ball is cracked or broken before or during planting operations.

D. EXCAVATING OF PLANTING AREA

1. Stake out on the ground locations for plants and outlines of area to be planted, and obtain approval of the landscape architect before excavation is begun. Landscaped areas to be thoroughly weeded prior to planting operations.

E. PLANTING OPERATIONS

1. Set plants at same relationship to finished grade as they bore to the ground from which they were dug. Use planting soil to backfill approximately 2/3 full, water thoroughly before installing remainder of the planting soil to top of pits, eliminating all air pockets.

2. Set planting plumb and brace rigidly in position until the planting soil has been stamped solidly around the ball and roots. Cut ropes or strings from the top of ball after plant has been set. Leave burlap or cloth wrapping intact around balls. Turn under and bury portions of burlap at top of ball.

3. Protect plants at all times from sun or drying winds. Plants that can not be planted immediately on delivery shall be kept in the shade, well protected with soil, peat moss or other exceptable material and shall be kept well watered. Plants shall not remain unplanted for longer than three days after delivery.

4. Plants shall not be bound with wire or rope at any time so as to damage the bark or break branches. Plants shall be lifted and handled from the bottom of the ball only.

5. Mulch all pits and beds with a two inch layer of bark, mulch immediately after planting and work into the top three inches of the planting soil. Form a 3" earth saucer around each plant. Water all plants immediately after planting. Add additional mulch.

F. STAKING, WRAPPING AND PRUNING

1. Staking shall be completed immediately after planting. Plants shall stand plumb after staking. Stakes and guy wire shall be removed at the end of the guarantee peroid and disposed of off-site by the contractor.

2. Wrap deciduous tree trunks starting at the base of the tree up to the second branch. Remove wrapping at the end of the guarantee period.

3. Prune plants at the time of planting as directed by the landscape architect to remove 1/5 or 1/3 of the foliage. Remove all dead wood, suckers or broken branches and preserve the natural charactor of the plant.

G. GUARANTEE

1. All plant material shall be guaranteed by the contractor to be in a healthy and vigorous condition at the beginning of the second growing season following acceptance by the landscape architect.

H. TREE PRESERVATION

1. Snow fencing shall be erected around all areas where existing vegetation is to be preserved.

2. Individual trees and groups of trees shall be protected by fencingaround a perimeter of their branches using standard, 48" high snow fence securely mounted to standard steel posts set not more than 6' apart.

3. Fencing shall be installed prior to the start of any construction activity.

4. EXISTING INVASIVE SPECIES ON SITE IN AREAS THAT ARE TO REMAIN UNDISTURBED ARE TO BE REMOVED PRIOR TO CERTIFICATION IN ACCORDANCE WITH SECTION 1.5 CERTIFICATION OF PLANT MATERIALS LOCATED IN THE PRINCE GEORGE'S COUNTY LANDSCAPE MANUAL, DECEMBER 2010.

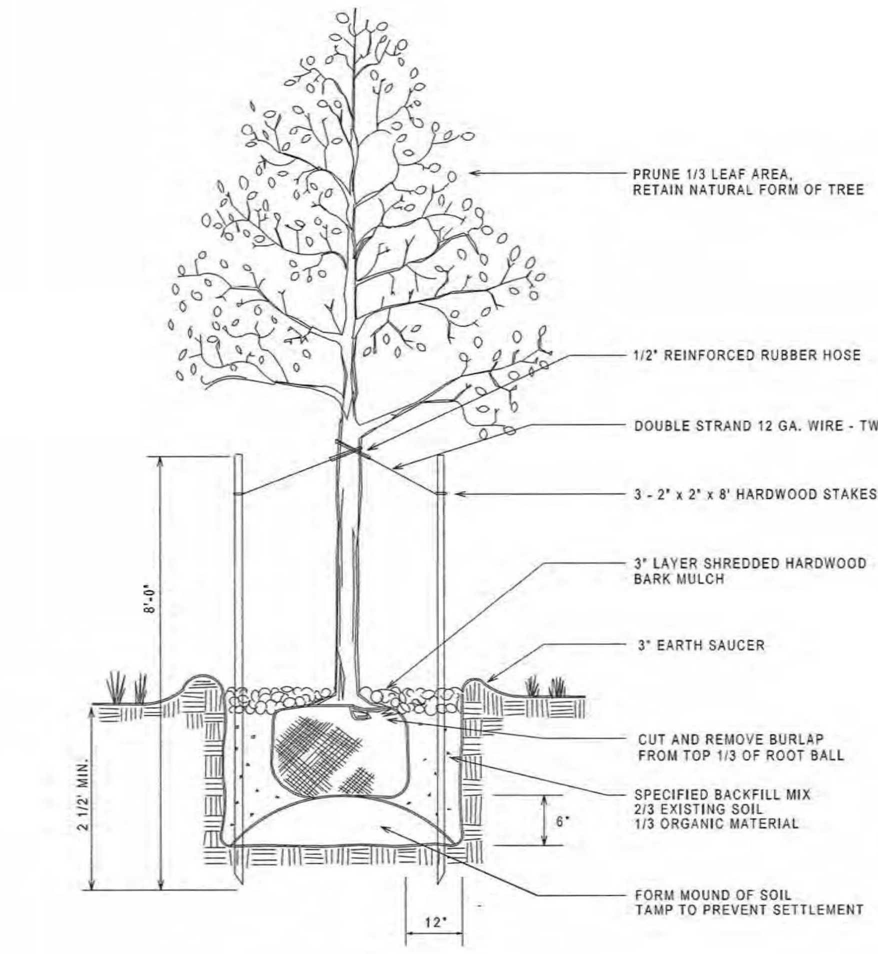

TREE PLANTING DETAIL
NOT TO SCALE

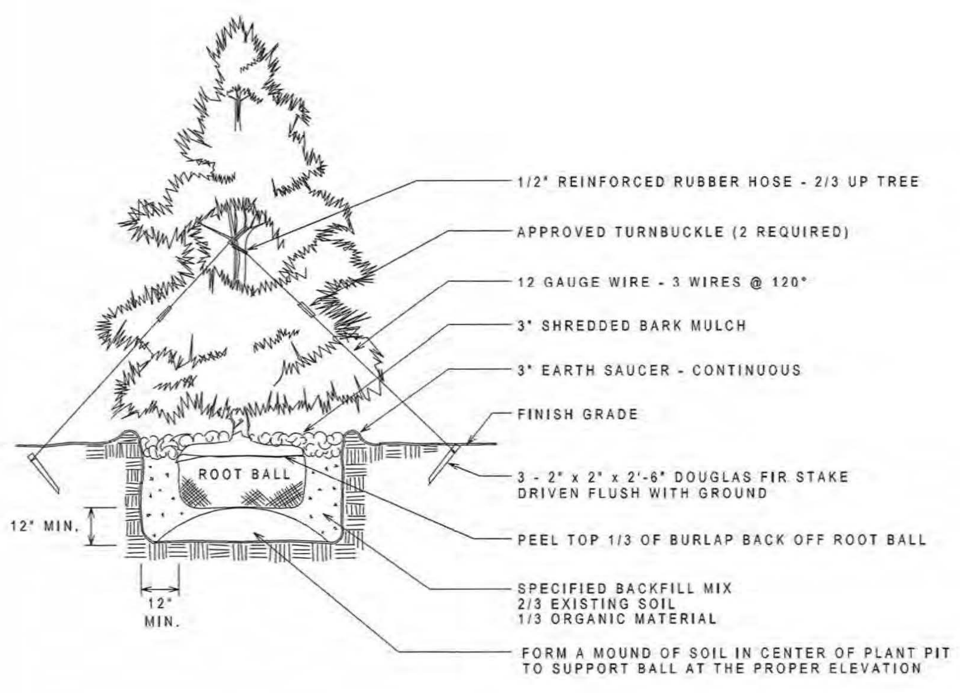

TREE PLANTING DETAIL - EVERGREEN TREE
NOT TO SCALE

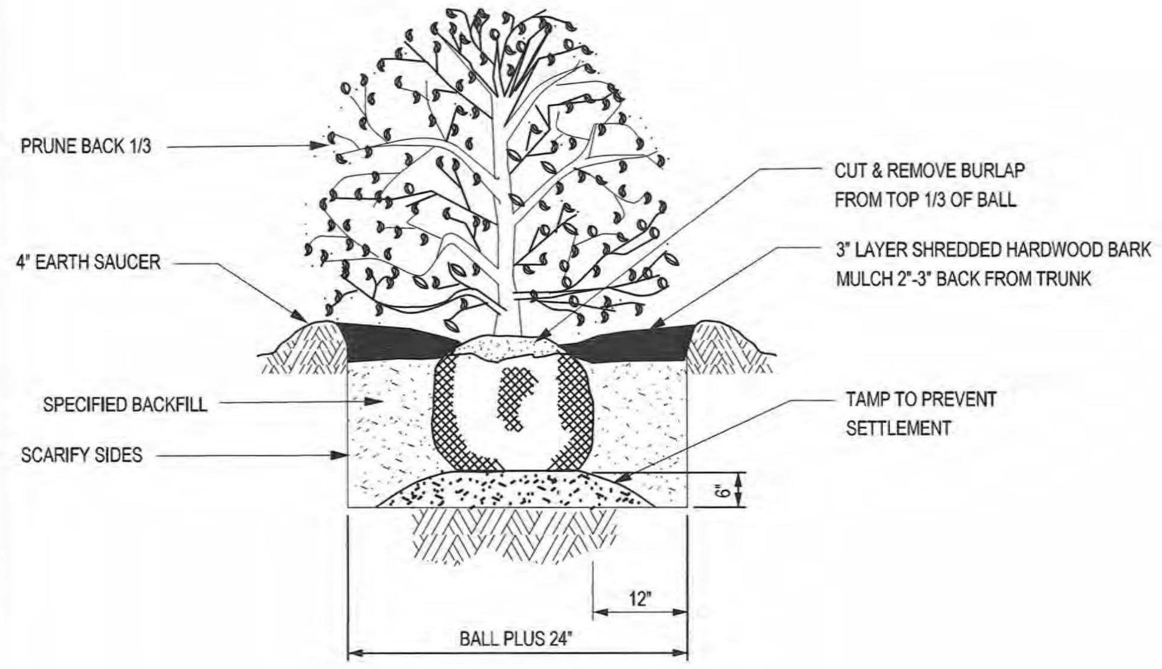

DETAIL - SHRUB PLANTING
NOT TO SCALE

SCHEDULE FOR SECTION 4.2
REQUIREMENTS FOR LANDSCAPED STRIPS ALONG STREETS
FOR BRANCHVILLE ROAD

LINEAR FEET OF STREET FRONTAGE, EXCLUDING DRIVEWAY ENTRANCES: 275'

1. GENERAL PLAN DESIGNATION: X DEVELOPING TIER; ___ DEVELOPED TIER, CORRIDOR NODE OR CENTER; ___ RURAL TIER
2. OPTION SELECTED: (1), 2, 3, or 4: — 1 or 2:
3. IS THERE A PUBLIC UTILITY EASEMENT ALONG THE FRONTAGE OF THE PROPERTY? X YES ___ NO
4. NUMBER OF PLANTS REQUIRED: 8 SHADE TREES; 79 SHRUBS; 0 25' STRIP OF EXISTING TREES — ___ SHADE TREES; ___ SHRUBS; ___ 25' STRIP OF EXISTING TREES
5. TOTAL NUMBER OF TRESS PROVIDED: 8 SHADE TREES; 0 ORAMENTAL/EVERGREEN; 79 SHRUBS; 0 25' STRIP OF EXISTING TREES — ___ SHADE TREES; ___ ORNAMENTAL/EVERGREEN; ___ SHRUBS; ___ 25' STRIP OF EXISTING TREES

SCHEDULE FOR SECTION 4.2
REQUIREMENTS FOR LANDSCAPED STRIPS ALONG STREETS
FOR GREENBELT ROAD

LINEAR FEET OF STREET FRONTAGE, EXCLUDING DRIVEWAY ENTRANCES: 275' (WOODLAND PRESERVED AREA)

1. GENERAL PLAN DESIGNATION: X DEVELOPING TIER; ___ DEVELOPED TIER, CORRIDOR NODE OR CENTER; ___ RURAL TIER
2. OPTION SELECTED: (1), 2, 3, or 4: — 1 or 2:
3. IS THERE A PUBLIC UTILITY EASEMENT ALONG THE FRONTAGE OF THE PROPERTY? ___ YES X NO
4. NUMBER OF PLANTS REQUIRED: 0 SHADE TREES; 0 SHRUBS; 0 25' STRIP OF EXISTING TREES — ___ SHADE TREES; ___ SHRUBS; ___ 25' STRIP OF EXISTING TREES
5. TOTAL NUMBER OF TRESS PROVIDED: 0 SHADE TREES; 0 ORAMENTAL/EVERGREEN; 0 SHRUBS; 0 25' STRIP OF EXISTING TREES — ___ SHADE TREES; ___ ORNAMENTAL/EVERGREEN; ___ SHRUBS; ___ 25' STRIP OF EXISTING TREES

SCHEDULE FOR SECTION 4.3(C)(1)
PARKING LOT PERIMETER LANDSCAPE STRIP

LINEAR FEET OF PARKING LOT PERIMETER ADJACENT TO PROPERTY LINE: 64

1. GENERAL PLAN DESIGNATION:	X DEVELOPED TIER CORRIDOR, NODE OR CENTER	___ DEVELOPING TIER	___ RURAL TIER
2. OPTION SELECTED:	__1__2	X 1__2	__1__2
3. WIDTH OF PERIMETER STRIP REQUIRED:	___ FEET	5 FEET	___ FEET
4. WIDTH OF PERIMETER STRIP PROVIDED:	___ FEET	10 FEET	___ FEET
5. PLANT MATERIAL REQUIRED:	___ SHADE TREES	2 SHADE TREES	___ SHADE TREES
	___ SHRUBS	6 SHRUBS	___ SHRUBS
6. PLANT MATERIAL PROVIDED:	___ SHADE TREES	2 SHADE TREES	___ SHADE TREES
	___ SHRUBS	6 SHRUBS	___ SHRUBS
	___ EXISTING SHADE TREES	0 EXISTING SHADE TREES	___ EXISTING SHADE TREES

Tree Canopy Coverage Schedule for Sec. 25-128

Project Name:	TCP2#:	DRD Case #:	Area (acres)
EZ STORAGE		DSP-15031	
Site Calculations:	Zone 1:	I-2	1.82
	Zone 2:		
	Zone 3:		
	Zone 4:		
	Total Acres:		1.82
Total Acres (gross acres)	% of TCC required	TCC Required (Acres)	TCC Required In (SF)
1.82	10.0%	0.182	7928
A. TOTAL ON-SITE WC PROVIDED (acres) =	0.00	acres	0
B. TOTAL AREA EXISTING TREES (non-WC acres) =	0.18	acres	7840.8
C. TOTAL SQUARE FOOTAGE IN LANDSCAPE TREES =			2935
D. TOTAL TREE CANOPY COVERAGE PROVIDED =			10776
E. TOTAL SQUARE FOOTAGE REQUIRED =			7928
			Requirement Satisfied

Credit Categories for Landscape Trees	TCC Credit per Tree Based on Size at Planting (SF)	Number of Trees	TCC Credit (SF)
Deciduous - **columnar** shade tree (50 ' or less height)	2 -1/2 - 3" = 65	9	585
	3 - 3 1/2" = 75	0	0
Deciduous - **ornamental** tree (20' or less height with equal spread). Minimum planting size 7 - 9 ' in height	1-1/2 - 1-3/4"= 75	0	0
	2 - 2 1/2" = 100	0	0
	2 -1/2 - 3" = 110	0	0
Deciduous - **minor shade** tree (25-50' height with equal spread or greater). Minimum planting size 8-10' in height	2 -1/2 - 3" = 160		0
	3 - 3 1/2" = 175	0	0
Deciduous - **major shade** tree (50' and greater ht. with spread equal to or greater than ht) Minimum planting size 12 to 14' in height	2 -1/2 - 3" = 225	0	0
	3 - 3 1/2" = 250	0	0
Evergreen - **columnar** tree (less than 30' height with spread less than 15')	6 - 8' = 40	0	0
	8 - 10' = 50	3	150
	10 - 12' = 75	0	0
Evergreen - **small tree** (30-40' height with spread of 15-20')	6 - 8' = 75	0	0
	8 - 10' = 100	22	2200
	10 - 12' = 125	0	0
Evergreen - **medium tree** (40-50' height with spread of 20-30')	6 - 8' = 125	0	0
	8 - 10' = 150	0	0
	10 - 12' = 175	0	0
Evergreen - **large tree** (50' height or greater with spread of over 30')	6 - 8' = 150	0	0
	8 - 10' = 200	0	0
	10 - 12' = 250	0	0
TOTAL NUMBER OF TREES/TCC CREDIT (SF)		34	2935

Manually enter information/figures into shaded areas)

SCHEDULE FOR SECTION 4.3(C)(2)
INTERIOR PLANTING FOR PARKING LOTS 7,000 SQUARE FEET OR LARGER

1. PARKING LOT AREA (SEE FIG. 4.3-7): 11,391 SQUARE FEET
2. INTERIOR LANDSCAPE AREA REQUIRED: 8 % — 912 SQUARE FEET
3. INTERIOR LANDSCAPE AREA PROVIDED: 9 % — 981 SQUARE FEET
4. MINIMUM NUMBER OF SHADE TREES REQUIRED: (1 PER 300 SQUARE FEET OF INTERIOR PLANTING AREA) — 4 SHADE TREES
5. SHADE TREES PROVIDED: 4 SHADE TREES
6. IS A MINIMUM OF 160 SQUARE FEET OF CONTIGUOUS PERVIOUS LAND AREA PROVIDED PER SHADE TREE? X YES ___ NO
7. IS THERE A PLANTING ISLAND ON AVERAGE EVERY 10 SPACES? X YES ___ NO
8. IS A CURB OR WHEELSTOP PROVIDED FOR ALL PARKING SPACES ABUTTING A PLANTING OR PEDESTRIAN AREA? ___ YES X NO
9. ARE PLANTING ISLANDS WHICH ARE EITHER PARALLEL OR PERPENDICULAR TO PARKING SPACES ON BOTH SIDES A MINIMUM OF 9 FEET WIDE? X YES ___ NO
10. IS A PLANTING ISLAND THAT IS PERPENDICULAR TO PARKING SPACES ON ONE SIDE A MINIMUM OF 6 FEET WIDE? X YES ___ NO
11. FOR PARKING LOT 50,000 SQUARE FEET OR LARGER: N/A
A) IS THERE A 9-FOOT ISLAND PERPENDICULAR TO PARKING FOR EVERY TWO BAYS? ___ YES ___ NO
OR
B) IS THE NUMBER OF SHADE TREES REQUIRED INCREASED? (1/200 SQ.F.T. OF INTERIOR PLANTING AREA PROVIDED) ___ YES ___ NO

SCHEDULE FOR SECTION 4.3(C)(2)
INTERIOR PLANTING FOR PARKING LOTS 7,000 SQUARE FEET OR LARGER

1. PARKING LOT AREA (SEE FIG. 4.3-7): 3,653 SQUARE FEET
2. INTERIOR LANDSCAPE AREA REQUIRED: 0 % — 0 SQUARE FEET
3. INTERIOR LANDSCAPE AREA PROVIDED: 0 % — 0 SQUARE FEET
4. MINIMUM NUMBER OF SHADE TREES REQUIRED: (1 PER 300 SQUARE FEET OF INTERIOR PLANTING AREA) — 0 SHADE TREES
5. SHADE TREES PROVIDED: 0 SHADE TREES
6. IS A MINIMUM OF 160 SQUARE FEET OF CONTIGUOUS PERVIOUS LAND AREA PROVIDED PER SHADE TREE? N/A ___ YES ___ NO
7. IS THERE A PLANTING ISLAND ON AVERAGE EVERY 10 SPACES? X YES ___ NO
8. IS A CURB OR WHEELSTOP PROVIDED FOR ALL PARKING SPACES ABUTTING A PLANTING OR PEDESTRIAN AREA? X YES ___ NO
9. ARE PLANTING ISLANDS WHICH ARE EITHER PARALLEL OR PERPENDICULAR TO PARKING SPACES ON BOTH SIDES A MINIMUM OF 9 FEET WIDE? N/A ___ YES ___ NO
10. IS A PLANTING ISLAND THAT IS PERPENDICULAR TO PARKING SPACES ON ONE SIDE A MINIMUM OF 6 FEET WIDE? N/A ___ YES ___ NO
11. FOR PARKING LOT 50,000 SQUARE FEET OR LARGER: N/A
A) IS THERE A 9-FOOT ISLAND PERPENDICULAR TO PARKING FOR EVERY TWO BAYS? ___ YES ___ NO
OR
B) IS THE NUMBER OF SHADE TREES REQUIRED INCREASED? (1/200 SQ.F.T. OF INTERIOR PLANTING AREA PROVIDED) ___ YES ___ NO

SCHEDULE FOR SECTION 4.7 "A"
BUFFERING INCOMPATIBLE USES REQUIREMENTS
205 LF ALONG WESTERN BOUNDARY

1. GENERAL PLAN DESIGNATION: X DEVELOPED TIER, CORRIDOR NODE OR CENTER; ___ DEVELOPING OR RURAL TIER
2. USE OF PROPOSED DEVELOPMENT: CONSOLIDATED STORAGE (FORMERLY MINI-WAREHOUSE)
3. IMPACT OF PROPOSED DEVELOPMENT: H
4. USE OF ADJOINING DEVELOPMENT: ELEVATOR REPAIR (CONTRACTOR'S OFFICE WITH OUTSIDE STORAGE)
5. IMPACT OF ADJOINING DEVELOPMENT: H
6. MINIMUM REQUIRED BUFFERYARD (A,B,C,D OR E) NONE
7. MINIMUM REQUIRED BUILDING SETBACK N/A FEET
8. BUILDING SETBACK PROVIDED N/A FEET
9. MINIMUM REQUIRED WIDTH OF LANDSCAPE YARD N/A FEET
10. WIDTH OF LANDSCAPE YARD PROVIDED: N/A FEET (THE REQUIRED SETBACK AND LANDSCAPE YARD MAY BE REDUCED BY 50% IN THE DEVELOPED TIER, CORRIDOR NODE OR CENTER WHEN A 6 FOOT HIGH FENCE OR WALL IS PROVIDED)
11. LINEAR FEET OF BUFFER STRIP REQUIRED ALONG PROPERTY LINE AND RIGHT-OF-WAY N/A LINEAR FEET
12. PERCENTAGE OF REQUIRED BUFFERYARD OCCUPIED BY EXISTING TREES: 0 %
13. IS A SIX FOOT HIGH FENCE OR WALL INCLUDED IN BUFFERYARD? N/A YES ___ NO
14. TOTAL NUMBER OF PLANT UNITS REQUIRED IN BUFFER STRIP: 0 P.U.
15. TOTAL NUMBER OF PLANT UNITS PROVIDED: SHADE TREES 0 X 10 P.U.= 0 P.U.; ORNAMENTAL/EVERGREEN TREES 0 X 5 P.U.= 0 P.U.; SHRUBS 0 X 1 P.U.= 0 P.U.; TOTAL= 0 P.U.

SCHEDULE FOR SECTION 4.7 "B"
BUFFERING INCOMPATIBLE USES REQUIREMENTS
59 LF ALONG WESTERN BOUNDARY

1. GENERAL PLAN DESIGNATION: X DEVELOPED TIER, CORRIDOR NODE OR CENTER; ___ DEVELOPING OR RURAL TIER
2. USE OF PROPOSED DEVELOPMENT: CONSOLIDATED STORAGE (FORMERLY MINI-WAREHOUSE)
3. IMPACT OF PROPOSED DEVELOPMENT: H
4. USE OF ADJOINING DEVELOPMENT: AUTOMATIVE PAINT STORE
5. IMPACT OF ADJOINING DEVELOPMENT: M
6. MINIMUM REQUIRED BUFFERYARD (A,B,C,D OR E) B
7. MINIMUM REQUIRED BUILDING SETBACK 30 FEET
8. BUILDING SETBACK PROVIDED 15 FEET
9. MINIMUM REQUIRED WIDTH OF LANDSCAPE YARD 20 FEET
10. WIDTH OF LANDSCAPE YARD PROVIDED: 10 FEET (THE REQUIRED SETBACK AND LANDSCAPE YARD MAY BE REDUCED BY 50% IN THE DEVELOPED TIER, CORRIDOR NODE OR CENTER WHEN A 6 FOOT HIGH FENCE OR WALL IS PROVIDED)
11. LINEAR FEET OF BUFFER STRIP REQUIRED ALONG PROPERTY LINE AND RIGHT-OF-WAY 59 LINEAR FEET
12. PERCENTAGE OF REQUIRED BUFFERYARD OCCUPIED BY EXISTING TREES: 55 %
13. IS A SIX FOOT HIGH FENCE OR WALL INCLUDED IN BUFFERYARD? X YES ___ NO
14. TOTAL NUMBER OF PLANT UNITS REQUIRED IN BUFFER STRIP: 24 P.U.
15. TOTAL NUMBER OF PLANT UNITS PROVIDED: SHADE TREES 3 X 10 P.U.= 30 P.U.; ORNAMENTAL/EVERGREEN TREES 0 X 5 P.U.= 0 P.U.; SHRUBS 0 X 1 P.U.= 0 P.U.; TOTAL= 30 P.U.

SCHEDULE FOR SECTION 4.7 "C"
BUFFERING INCOMPATIBLE USES REQUIREMENTS
193 LF ALONG EASTERN BOUNDARY

1. GENERAL PLAN DESIGNATION: X DEVELOPED TIER, CORRIDOR NODE OR CENTER; ___ DEVELOPING OR RURAL TIER
2. USE OF PROPOSED DEVELOPMENT: CONSOLIDATED STORAGE (FORMERLY MINI-WAREHOUSE)
3. IMPACT OF PROPOSED DEVELOPMENT: H
4. USE OF ADJOINING DEVELOPMENT: RAIL LINES AT OR ABOVE GROUND LEVEL
5. IMPACT OF ADJOINING DEVELOPMENT: H
6. MINIMUM REQUIRED BUFFERYARD (A,B,C,D OR E) NONE
7. MINIMUM REQUIRED BUILDING SETBACK N/A FEET
8. BUILDING SETBACK PROVIDED N/A FEET
9. MINIMUM REQUIRED WIDTH OF LANDSCAPE YARD N/A FEET
10. WIDTH OF LANDSCAPE YARD PROVIDED: N/A FEET (THE REQUIRED SETBACK AND LANDSCAPE YARD MAY BE REDUCED BY 50% IN THE DEVELOPED TIER, CORRIDOR NODE OR CENTER WHEN A 6 FOOT HIGH FENCE OR WALL IS PROVIDED)
11. LINEAR FEET OF BUFFER STRIP REQUIRED ALONG PROPERTY LINE AND RIGHT-OF-WAY N/A LINEAR FEET
12. PERCENTAGE OF REQUIRED BUFFERYARD OCCUPIED BY EXISTING TREES: 0 %
13. IS A SIX FOOT HIGH FENCE OR WALL INCLUDED IN BUFFERYARD? ___ YES N/A NO
14. TOTAL NUMBER OF PLANT UNITS REQUIRED IN BUFFER STRIP: 0 P.U.
15. TOTAL NUMBER OF PLANT UNITS PROVIDED: SHADE TREES 0 X 10 P.U.= 0 P.U.; ORNAMENTAL/EVERGREEN TREES 0 X 5 P.U.= 0 P.U.; SHRUBS 0 X 1 P.U.= 0 P.U.; TOTAL= 0 P.U.

SCHEDULE FOR SECTION 4.9
SUSTAINABLE LANDSCAPING REQUIREMENTS

1. PERCENTAGE OF NATIVE PLAN MATERIAL PROPOSED IN EACH CATEGORY (MINIMUM REQUIRED):
SHADE TREES: TOTAL 15 X50%= 8 NATIVE; TOTAL NUMBER PROVIDED 11 = 73 % NATIVE
ORNAMENTAL: TOTAL 0 X50%= 0 NATIVE; TOTAL NUMBER PROVIDED 0 = N/A % NATIVE
SHRUBS: TOTAL 85 X30%= 26 NATIVE; TOTAL NUMBER PROVIDED 85 = 100 % NATIVE
EVERGREEN: TOTAL 0 X30%= 0 NATIVE; TOTAL NUMBER PROVIDED 0 = N/A % NATIVE
2. ARE INVASIVE SPECIES PROPOSED? ___ YES X NO
3. ARE EXISTING INVASIVE SPECIES ON SITE IN AREAS THAT ARE TO REMAIN UNDISTURBED? X YES ___ NO
4. IF 'YES' IS CHECKED DIRECTLY ABOVE, IS A NOTE INCLUDED ON THE PLAN REQUIRING REMOVAL OF INVASIVE SPECIES PRIOR TO CERTIFICATION IN ACCORDANCE WITH SECTION 1.5 CERTIFICATION OF PLANT MATERIALS, OF THIS MANUAL? X YES ___ NO
5. ARE TREES PROPOSED TO BE PLANTED ON SLOPES GREATER THAN 3 TO 1? ___ YES X NO

THIS BLOCK IS FOR OFFICIAL USE ONLY
QR label certifies that this plan meets conditions of final approval by the Planning Board, its designee or the District Council.
M-NCPPC APPROVAL
PROJECT NAME: ezStorage College Park
PROJECT NUMBER: DSP - 15031
For Conditions of Approval see Site Plan Cover Sheet or Approval Sheet Revision numbers must be included in the Project Number

SOLTESZ
Engineering
Surveying
Planning
Environmental Sciences
LANHAM OFFICE
4300 Forbes Boulevard, Suite 230
Lanham, MD 20706
P. 301.794.7555 F. 301.794.7656
Rockville
Lanham
Waldorf
Leonardtown
Frederick
Soltesz DC, LLC
www.solteszco.com

NO.	REVISIONS	BY	DATE

DATE: AUGUST 2015 | CAD STANDARDS VERSION: V8 - 2000
DESIGNED: YOR | TECHNICIAN: YOR | CHECKED: THD

MISS UTILITY NOTE

INFORMATION CONCERNING EXISTING UNDERGROUND UTILITIES WAS OBTAINED FROM AVAILABLE RECORDS. THE CONTRACTOR MUST DETERMINE THE EXACT LOCATION AND ELEVATION OF ALL EXISTING UTILITIES AND UTILITY CROSSINGS BY DIGGING TEST PITS BY HAND, WELL IN ADVANCE OF THE START OF EXCAVATION. CONTACT "MISS UTILITY" AT 1-800-257-7777, 48 HOURS PRIOR TO THE START OF EXCAVATION. IF CLEARANCES ARE LESS THAN SHOWN ON THIS PLAN OR TWELVE (12) INCHES, WHICHEVER IS LESS, CONTACT THE ENGINEER AND THE UTILITY COMPANY BEFORE PROCEEDING WITH CONSTRUCTION. CLEARANCES LESS THAN NOTED MAY REQUIRE REVISIONS TO THIS PLAN.

OWNER/DEVELOPER/APPLICANT

SIENA CORPORATION
8221 SNOWDEN RIVER PARKWAY
COLUMBIA, MARYLAND 21045
OFFICE: (443) 539-3070
CONTACT NAME: CRAIG PITTINGER

MAP XX GRID XXXXX

TAX MAP	ZONING CATEGORY:
25, F4	I-2
WSSC 200' SHEET	XXXX:
210NE05	XXXX
SITE DATUM HORIZONTAL: XXXXXX VERTICAL: XXXXXX	XXXX: XXXX

STATE OF MARYLAND DAVID JOHN BICKEL NO. 3216 LANDSCAPE ARCHITECT 9-21-16

LANDSCAPE AND LIGHTING PLAN
ezStorage College Park
5151 Branchville Road
College Park, Maryland

BERWIN (21th) ELECTION DISTRICT, PRINCE GEORGE'S COUNTY, MARYLAND

ONE INCH
1" = 20'

SHEET 2 OF 2

PROJECT NO. 15770600

P:\15770600\ENGINEER\LANDSCP\LAN_02.sht Scale= 20.0000 ft / in. User= yroh PLTdrv= PDF_Grey_150.pltcfg Pentbl= TEXT_SUB.tbl 9/21/2016 10:16:25 AM

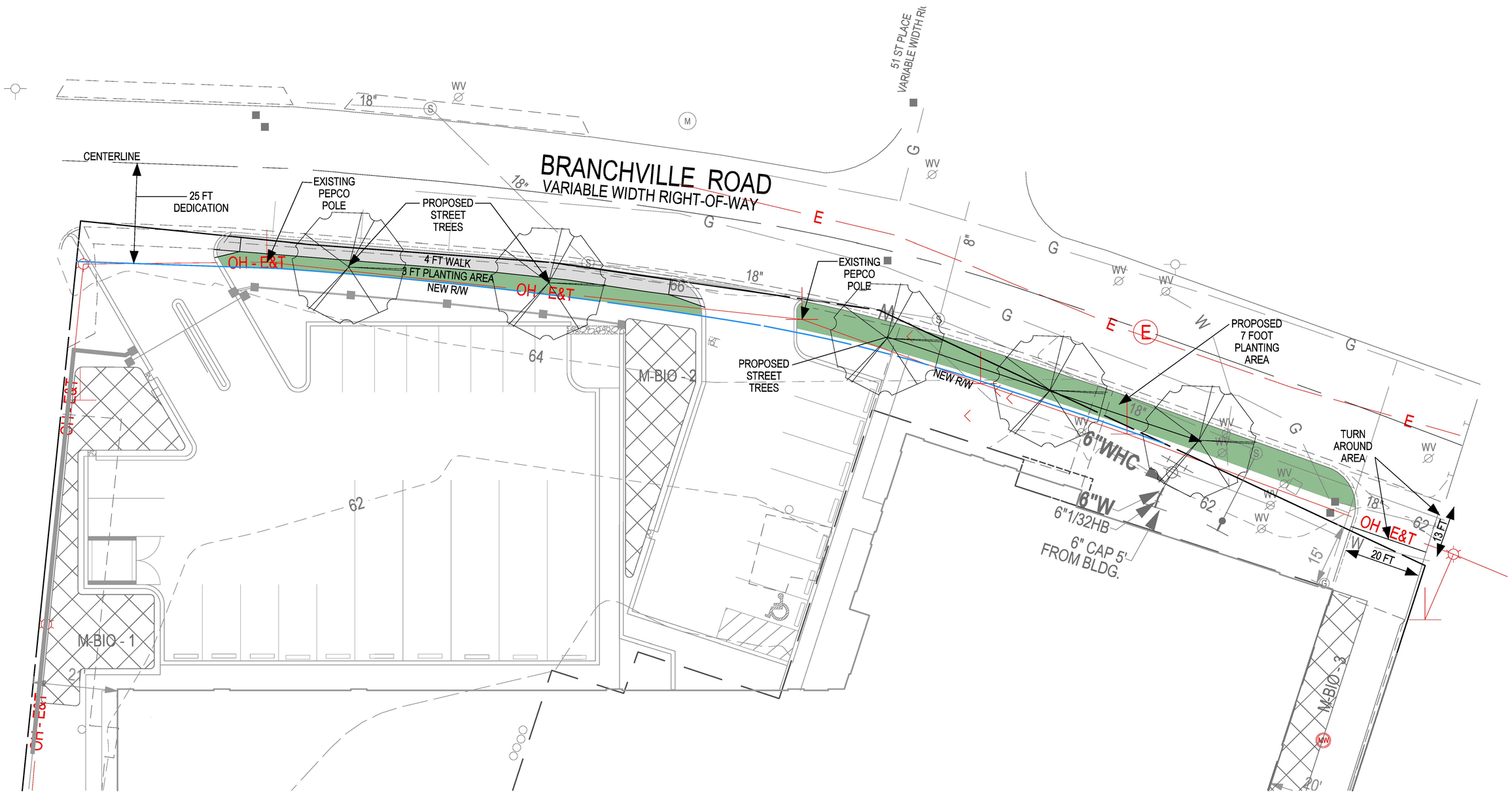

SOLTESZ, LLC

Engineering
Surveying
Planning
Environmental Sciences

4300 Forbes Boulevard, Suite 230
Lanham, MD 20706
P. 301.794.7555 F. 301.794.7656

www.soltesz.com

10 5 0 10 20

1" = 10'

BRANCHVILLE ROAD
FRONTAGE EXHIBIT

EZ STORAGE COLLEGE PARK

5151 BRANCHVILLE ROAD
COLLEGE PARK, MARYLAND

BERWIN (21th) ELECTION DISTRICT, PRINCE GEORGE'S COUNTY, MARYLAND

The original of this drawing document was prepared by Soltesz, LLC (SOLTESZ). If this document was not obtained directly from SOLTESZ and/or it was transmitted electronically, SOLTESZ cannot guarantee that unauthorized changes and / or alterations were not made by others. If verification of the information contained hereon is needed, contact should be made directly with SOLTESZ. SOLTESZ makes no warranties, express or implied, concerning the accuracy of any information that has been transmitted by electronic means.

6

Special Session (16-G-130)

City Position on use of City occupancy permits

CITY OF COLLEGE PARK, MARYLAND
REGULAR COUNCIL MEETING AGENDA ITEM

AGENDA ITEM NUMBER 16-G-130

Prepared By: Suellen M. Ferguson, Esq.
City Attorney

Meeting Date: October 18, 2016

Presented By: Suellen M. Ferguson, Esq.
City Attorney

Consent Agenda: No

Action Requested: Approval of a motion to oppose applications for Validation of Permits Issued in Error Nos. 14-00000964, 14-00002553, 15-00000961 and 15-00001224, regarding 4210, 4212, 4214, and 4216 Knox Road, owned by Manucher Bahrami, under §27-258 of the Prince George's County Zoning Ordinance, on the basis that the applicant seeks to use City occupancy permits to justify an increase in density on the properties.

Strategic Plan Goal: Goal #3 High Quality Development and Reinvestment

Background/Justification:
The City received a notice of hearing with respect to four applications for the properties located at 4210, 4212, 4214, and 4216 Knox Road. The hearing on October 26 is to consider a request to validate permits issued in error as part of an effort by the owner to obtain use and occupancy permits from Prince George's County that support three dwelling units per building, instead of the two allowed in this zone.

The buildings on the properties are known as "Knox Boxes". When constructed in the 1950's, the buildings contained two dwelling units on the first and second floors, which was consistent with the density and bedroom percentages at the time and later. Thereafter, basement apartments were added without building permits from the County or the City. No use and occupancy permit was ever obtained from the County for the third unit. A use and occupancy permit for three units is not allowed and cannot not be issued without using an alternative proceeding.

The County allows applications to validate a permit issued in error when an owner has relied upon the issuance of a permit to confirm a status of the property. Since permits were never acquired from the County for these properties, there are no County permits on which to rely for such an action. However, the City has inspected these properties every year for decades and has issued occupancy permits, which are health and safety permits based on inspection of the premises. The City does not have zoning power, and so cannot authorize more density or numbers of units on a property. The City does note in its records how many units are present, in large part due to the fact that the cost of the permit is based on the number of units to be inspected. Counsel for the owners is attempting to use the City occupancy permit as the "permit" issued in error to justify the increase in units and obtain an occupancy permit. However, the City permits were not issued in error, as they do not relate to density and are not issued by the same governing body that does regulate density.

The applicant did not discuss this application with the City's Planning Department. The City did receive a request from the applicant's attorney to provide a letter confirming that the City does not have a permit issued in error process for City occupancy permits, which it does not. It wasn't until this request that City staff knew about this application. Copies of the application and other documents provided with this memo were obtained yesterday.

To allow a City permit to be used to justify another's government's process for increasing density puts another layer of complexity and unintended consequences on issuance of City permits. This is a matter of first impression and it is recommended that the City Council object to this use of City permits.

Fiscal Impact: None at this time.
Council Options: #1: Object to the use of a City occupancy permit as the basis for a validation of permit issued in error proceeding. #2: Support the use of a City occupancy permit as the basis for a validation of permit issued in error proceeding. #3: Take no action.
Staff Recommendation: #1
Recommended Motion: I move to oppose applications for Validation of Permits Issued in Error Nos. 14-00000964, 14-00002553, 15-00000961 and 15-00001224, regarding 4210, 4212, 4214, and 4216 Knox Road, owned by Manucher Bahrami, under §27-258 of the Prince George's County Zoning Ordinance, on the basis that the applicant seeks to use City occupancy permits to justify an increase in density on the properties, and to authorize City representatives to appear at the hearing on this matter, now set for October 26, 2016, to present the City's position.
Attachments: 1. Statements of justification to the Office of the Zoning Hearing Examiner. 2. Report from M-NCPPC permit reviewer

LAW OFFICES

MEYERS, RODBELL
& ROSENBAUM, P.A.

WILLIAM V. MEYERS *
RUSSELL E. WARFEL
LINDA C. BAHRAMI
JOSEPH B. CHAZEN
MICHELE LA ROCCA*
PAUL A. TURKHEIMER*
EDWARD S. MARIN *#
GINA M. SMITH*
M. EVAN MEYERS*
DAVID J. MARTIN*
DOUGLAS C. MEISTER+☼
MICHAEL R. ACKER*∀☼

JENNIFER M. VALINSKI
SAMUEL T. WOLF *
SANDRA B. STALZER *
CHRISTOPHER M. BALABAN
EMMANUEL A. FISHELMAN *
KAYANN S. CHAMBERS

+ *Also Admitted in Virginia*
* *Also Admitted in D.C.*
∀ *Also Admitted in Pennsylvania*
Also Admitted in New York
☼ *Also Admitted in West Virginia*

ROBERT H. ROSENBAUM*
Of Counsel

PAUL B. RODBELL
(1947-2001)

Please Respond to the Riverdale Address

6801 KENILWORTH AVENUE, SUITE 400
RIVERDALE PARK, MARYLAND 20737-1385
(301) 699-5800 FAX (301) 779-5746
EMAIL: billing@mrrlaw.net

9801 WASHINGTONIAN BLVD, SUITE 750
GAITHERSBURG, MARYLAND 20850
(301) 738-7061 FAX (301) 738-7065
EMAIL: admin@mrrlaw.net

RECEIVED
AUG 11 2016
OFFICE OF ZONING EXAMINER
PRINCE GEORGE'S CTY., MD

August 9, 2016

Hand Delivered
Office of the Zoning Hearing Examiner
c/o Ms. Susie Rawlings
County Administration Building
14741 Governor Oden Bowie Drive
Upper Marlboro, MD 20772

RE: 4216 Knox Road, College Park, Maryland 20740
Validation of Permit Issued in Error No. 15-00001224

Dear Madam Examiner:

Please be advised that I represent the sole property manager and applicant, Manucher Bahrami, regarding property located at 4216 Knox Road, College Park, Maryland 20740.

The following constitutes the Statement of Justification for the request, of a validation permit issued in error for 4216 Knox Road, specifically rental housing license No. 15-00001224.

I. OVERVIEW

(A) History:

The subject property was developed in 1953 from unimproved land and constructed with a two (2) story brick and frame structure. At the time of construction, the building consisted of two (2) apartment units and included a basement. In the late 1960's, the basement was finished creating an additional unit, bringing the total number of dwelling units per building to three (3).

The apartment building existed prior to the adoption of the 1968 bedroom percentages and prior to current density requirements, which now cause the property to be non-conforming.

ERR 261 ZHE EXHIBIT # 1 68

Since 1977, the building has been operating as a three (3) unit apartment building. The applicant has maintained and operated the subject property continuously as a three (3) unit apartment building since Manucher Bahrami's brother, Siamack Bahrami and his wife, Azar Dashti jointly purchased the property in 1997.

(B) Master Plan:

The property 4216 Knox Road, is located within *the Central US 1 Corridor Development District Overlay Zone*.

(C) Surrounding Uses:

The subject property is surrounded by residential use. To the immediate Southwest, is 4205 Knox Road, a six (6) unit apartment building that has been certified as non-conforming use. West of the property is a fifteen (15) unit apartment building located at 4206 Knox Road that has been certified as non-conforming use. The surrounding buildings are relatively similar to the subject property and have been used as multifamily apartments since they were built.

South of the subject property is an apartment building located at 4201 Knox Road, submitted in the record as Exhibit # 8 (e-f).

II. SUPPORTING DOCUMENTS ATTACHED HERETO:

(A) Applicant has applied for the use and occupancy permit No. 24979-2015-00 for the subject property. These are submitted in the record as Exhibit # 1.

(B) Site plan that includes the building layout of the configuration of the three (3) units and is submitted in the record as Exhibit # 2.

(C) Property plat which is submitted in the record as Exhibit # 3.

(D) The Applicant's brother has expended monies to purchase the subject property as evidenced by the Deed submitted into the record as Exhibit # 4 and according to the SDAT information sheet which is submitted as Exhibit # 5.

(E) Applicant has expended funds on the subject property to pay the property taxes, and to maintain and operate the three (3) rental units. These are submitted in the record as Exhibit # 6 and indicated as follows:

- Washington Suburban Sanitary Commission ("WSSC") water and sewer bills for March 27, 2014 – June 12, 2014.
- Allstate residential insurance policy declaration and bill for three (3) dwelling unit.
- Home Depot receipt for maintenance appliances dated October 2, 2014.
- Home Depot appliance invoice for 4216-B and 4216-C Knox Road.
- Alban Inspection invoice dated July 7, 2016.

- Siamack Bahrami and Azar Dashti Citi bank summary reflecting payments remitted to Washington Suburban Sanitary Commission and Allstate for expenses incurred on the subject property.
- Invoices received via email for maintenance work performed on the subject property.
- Residential lease agreements for the following units:
    - Unit 4216-B dated 5/17/2015
    - Unit 4216-B dated 5/20/2015
    - Unit 4216-A dated 5/20/2015
    - Unit 4216-C dated 6/23/2015
    - Unit 4216-C dated 6/24/2015 and
    - Unit 4216-A dated 7/31/2015

- 2013, 2014 and 2015 income tax returns reflecting rent received and expenses incurred for subject property.[1]

(F) The City of College Park permits - The City of College Park has issued rental housing licenses for three (3) dwelling units located on the subject property since 1969 (permit No. 244) – March 31, 2015 (permit No. 15-00001224). The permits are submitted in the record as Exhibit # 7.

(G) Photographs of 4216 Knox Road, including street view, submitted in the record as Exhibit # 8 (a-d).

(H) M-NCPPC's permit comments - M-NCPPC (Michelle Hughes) reviewed the use & occupancy permits for these property. It was then realized that a validation of a permit issued in error is necessary for the use & occupancy permit to be approved as the building was built with two (2) dwelling units and the third unit was added in the late 1960's. Submitted in the records as Exhibit # 9.

III. CRITERIA FOR VALIDATION OF A PERMIT ISSUED IN ERROR IS SATISFIED

A Permit may be validated as issued in error in accordance with §27-258(g) of the Zoning Ordinance. §27-258(g) states in pertinent part:

1) The District Council shall only approve the application if:

(A) No fraud or misrepresentation had been practiced in obtaining the permit;

No fraud or misrepresentation was practiced in obtaining the City of College Park rental housing licenses. Mr. Bahrami, Siamack Bahrami nor have Azar D Dashti misrepresented

[1] The 2014 and 2015 income tax documents reflect a data entry error as reflected on the address line 1A (4126 Knox Road, College Park, MD 20740). *See* Exhibit 6 (b) that confirms that 4126 Knox Road does not exists on Knox Road. The correct address is 4216 Knox Road and is the only property owned jointly by the applicant's brother Siamack Bahrami and his wife, Azar D Dashti.

any facts or take any fraudulent action in order to have the rental housing license issued for three (3) units in 4216 Knox Road.

(B) If, at the time of the permit's issuance, no appeal or controversy regarding its issuance was pending before any body;

The Board of Appeals, when contacted on August 2, 2016, confirmed that there are no records of any appeals concerning the subject property. Thus, there were no appeals or controversies as to the issuance of the rental housing licenses.

(C) The applicant acted in good faith, expending funds or incurring obligations in reliance on the permit; and

Mr. Bahrami, Siamack Bahrami and Azar D Dashti have expended funds paying utility bills and maintaining the property as they relied on the rental housing license that permitted rental of three (3) units.

(D) The validation will not be against the public interest.

Validation will not be against the public interest as sound, rental housing is provided, which has existed in this configuration since the 1960's and the subject property blend in with the surrounding property and do not alter the character of the neighborhood.

IV. CONCLUSION

The instant Application fulfills the requirements of §27-258(g) of the Zoning Ordinance. The 4216 Knox Road property, have been licensed by the City of College Park for three (3) dwelling units since at least 1968 pursuant to Multi-Family Rental Licenses issued by the City of College Park. The Applicant has applied for a Use and Occupancy Permit for the subject property. Therefore, certification as a non-conforming use, in accordance with §27-258(h) is requested as a result of the validation of rental housing license No. 15-00001224. Hence, approval of validation of multi-family housing license No. 15-00001224 is requested.

Very truly yours,

Michele La Rocca, Esq.

Cc: Manucher Bahrami
w/o enclosures

THE MARYLAND-NATIONAL CAPITAL PARK AND PLANNING COMMISSION
PERMIT REVIEW SECTION
14741 Governor Oden Bowie Drive, Upper Marlboro Md. 20772

Permit Reviewer:	Michelle Hughes	24976-2015-U thru 24979-2015-U
Telephone Number:	(301) 952-5409	June 22, 2015
Fax Number:	(301) 952-4141	
Permit Status:	www.mncppc.org	

The following comments were generated from permit review. Any questions or concerns regarding the following comments should be directed to the reviewer. For permit status, please direct your call to the appropriate phone number provided above.

Further review and comments may be generated when the appropriate or additional information has been submitted. Revised plans and required information must be submitted to the Permit Review Section.

1. These permits are for 2 apartment buildings located at 4210 and 4214 Knox Road. The property is zoned M-U-I and also located within the Central US 1 Corridor Development District Overlay Zone which permits multifamily dwelling as of June 2010. The buildings were constructed in 1953 per tax assessment. The property was zoned R-18 at this time. There are 3 dwelling units in each building and all are 2 bedroom units. **HISTORY:** *Each lot contains 5200 s.f. which provides a density of 25.2 du/acre. This exceeds the current maximum density of the R-18 Zone which is 12 units per acre. The buildings also exceed maximum bedroom percentages because 100% are two bedrooms but is permitted per US 1 corridor for in excess of applicable bedroom percentages. The apartments were constructed prior to the adoption of bedroom percentages in 1968 and prior to current density requirements. Per the applicability section of the Central US 1 Corridor DDOZ* ***legally existing uses*** *or uses which could have been certified are permitted to continue and are not nonconforming. Therefore if the properties were in compliance with the Zoning Ordinance in effect in 1953 and in continuous operation the building could be grandfathered. However at the time of construction in 1953 a minimum of 1,800 square of lot area was required per dwelling unit which would have only allowed 2 dwelling units. The buildings also would have required 3 off street parking spaces and only 2 spaces legally exist on the site based on a required size of 9' x 20' or 10' x 20'. Per information provided by the City of College Park during the review of other similar buildings in the area these buildings were originally constructed as 2 units in each building. Then in early the 1960's, a third unit was placed in the basement. At this time these properties* ***did not*** *contain adequate land area to meet the minimum net lot area for 3 units nor was the minimum off street parking spaces provided.* ***Therefore the 3 units were not lawful and cannot be grandfathered.*** Are there any issued rental licenses for three units for this property? Per Tim Holden of the Prince George's County Enforcement Division there are no licenses for these properties. Therefore it appears that the apartments cannot pursue certification of nonconforming use or Validation of Apartment License in Error since a valid apartment license was not issued for the 3 units. Detailed Site plan approval is required due to the 3 units not being legally existing. The applicant should contact Cheryl Summerlin at 301-952-3578 for information on this process.

Permit comments emailed to Cameran Bahrami (owner/applicant) at cameran@bahramilegal.com.

6/24/15 – I discussed permit comments with Cameran Bahrami. I referred him to Cheryl Summerlin for DSP process.

7/25/16 – Andy Facchina came into the office to get a copy of the submitted site plans. Would like to pursue validation of a rental license issued in error through the City of College Park. I told him we can only pursue this process with an issued license from the county. He will check into it.

LAW OFFICES

MEYERS, RODBELL & ROSENBAUM, P.A.

WILLIAM V. MEYERS *
RUSSELL E. WARFEL
LINDA C. BAHRAMI
JOSEPH B. CHAZEN
MICHELE LA ROCCA*
PAUL A. TURKHEIMER*
EDWARD S. MARIN *#
GINA M. SMITH*
M. EVAN MEYERS*
DAVID J. MARTIN*
DOUGLAS C. MEISTER+☼
MICHAEL R. ACKER*∀☼

JENNIFER M. VALINSKI
SAMUEL T. WOLF *
SANDRA B. STALZER *
CHRISTOPHER M. BALABAN
EMMANUEL A. FISHELMAN *
KAYANN S. CHAMBERS

+ *Also Admitted in Virginia*
* *Also Admitted in D.C.*
∀ *Also Admitted in Pennsylvania*
Also Admitted in New York
☼ *Also Admitted in West Virginia*

ROBERT H. ROSENBAUM*
Of Counsel

PAUL B. RODBELL
(1947-2001)

Please Respond to the Riverdale Address

6801 KENILWORTH AVENUE, SUITE 400
RIVERDALE PARK, MARYLAND 20737-1385
(301) 699-5800 FAX (301) 779-5746
EMAIL: billing@mrrlaw.net

9801 WASHINGTONIAN BLVD, SUITE 750
GAITHERSBURG, MARYLAND 20850
(301) 738-7061 FAX (301) 738-7065
EMAIL: admin@mrrlaw.net

RECEIVED
AUG 12 2016
OFFICE OF ZONING EXAMINER
PRINCE GEORGE'S CTY., MD

August 9, 2016

Hand Delivered
Office of the Zoning Hearing Examiner
c/o Ms. Susie Rawlings
County Administration Building
14741 Governor Oden Bowie Drive
Upper Marlboro, MD 20772

RE: Manucher Bahrami and Soraya Bahrami
4212 Knox Road, College Park, Maryland 20740
Validation of Permit Issued in Error No. 14-00002553

Dear Madam Examiner:

Please be advised that I represent one of the owners and applicant, Manucher Bahrami, regarding property located at 4212 Knox Road, College Park, Maryland 20740.

The following constitutes the Statement of Justification for the request, of a validation permit issued in error for 4212 Knox Road, specifically rental housing license No. 14-00002553.

I. OVERVIEW

(A) History:

The subject property was developed in 1953 from unimproved land and constructed with a two (2) story brick and frame structure. At the time of construction, the building consisted of two (2) apartment units and included a basement. In the early 1970's, the basement was finished creating an additional unit, bringing the total number of dwelling units per building to three (3).

ERR-258 ZHE EXHIBIT # 1 74

The apartment building existed prior to the adoption of the 1968 bedroom percentages and prior to current density requirements, which now cause the property to be non-conforming.

Since the early 1970s, the building has been operating as a three (3) unit apartment building. On July 29, 2014, the Applicant and his wife, Soraya Bahrami, purchased the property. Since the purchase date, the Applicant has maintained and operated the property continuously as a three (3) unit apartment building

(B) Master Plan:

The property 4212 Knox Road, is located within *the Central US 1 Corridor Development District Overlay Zone*.

(C) Surrounding Uses:

The subject property is surrounded by residential use. To the immediate Southwest, is 4205 Knox Road, a six (6) unit apartment building that has been certified as non-conforming use. West of the property is a fifteen (15) unit apartment building located at 4206 Knox Road that has been certified as non-conforming use. The surrounding buildings are relatively similar to the subject property and have been used as multifamily apartments since they were built.

South of the subject property is an apartment building located at 4201 Knox Road, submitted in the record as Exhibit # 8 (f-g).

II. SUPPORTING DOCUMENTS ATTACHED HERETO:

(A) Applicant has applied for the use and occupancy permit No. 24977-2015-00 for the subject property. This is submitted in the record as Exhibit # 1.

(B) Site plan that includes the building layout of the configuration of the three (3) units and is submitted in the record as Exhibit # 2.

(C) Property plat which is submitted in the record as Exhibit # 3.

(D) In 2014 the Applicant and his wife, Soraya Bahrami, expended monies to purchase the subject property as evidenced by the Deed submitted into the record as Exhibit # 4 and according to the SDAT information sheet which is submitted as Exhibit # 5.

(E) The Applicant has expended funds on the subject property to pay the property taxes, and to maintain and operate the three (3) rental units. These are submitted in the record as Exhibit # 6 and indicated as follows:

- 2015 income tax return reflecting rent received and expenses incurred for subject property
- Prince George's County Land Tax bill dated July 30, 2016
- Alban Inspection invoice dated June 24, 2016
- Maryland Department of the Environment Inspection Certificate No. 752814
- Washington Suburban Sanitary Commission ("WSSC") water and sewer bills for the following billing periods: August 22, 2014 – September 17, 2014; September 17,

2014 – December 18, 2014; September 17, 2015 – December 15, 2015 and December 15, 2015 – March 15, 2016

- Allstate residential insurance bill for three (3) dwelling unit
- Washington Gas: A WGL Company bill for Mach 25, 2016 and July 26, 2016;
- Residential lease agreements for the following units:
    - Unit 4212-C dated 1/4/2015,
    - Unit 4212-A dated 5/13/2015,
    - Unit 4212-A dated 5/28/2015,
    - Unit 4212-B dated 7/22/2015 and
    - Unit 4212-C dated 7/27/2015

(F) The City of College Park permits - The City of College Park has issued rental housing licenses for three (3) dwelling units located on the subject property since 1972 (permit No. 966) – February 2, 2015 (permit No. 14-00002553). The permits are submitted in the record as Exhibit # 7.

(G) Photographs of 4212 Knox Road, including street view, submitted in the record as Exhibit # 8 (a-e).

(H) M-NCPPC's permit comments - M-NCPPC (Michelle Hughes) reviewed the use & occupancy permits for these property. It was then realized that a validation of a permit issued in error is necessary for the use & occupancy permit to be approved as the building was built with two (2) dwelling units and the third unit was added in the late 1960's. Submitted in the records as Exhibit # 9.

III. CRITERIA FOR VALIDATION OF A PERMIT ISSUED IN ERROR IS SATISFIED

A Permit may be validated as issued in error in accordance with §27-258(g) of the Zoning Ordinance. §27-258(g) states in pertinent part:

1) The District Council shall only approve the application if:

(A) No fraud or misrepresentation had been practiced in obtaining the permit;

No fraud or misrepresentation was practiced in obtaining the City of College Park rental housing licenses. Mr. Bahrami nor did Soraya Bahrami, misrepresent any facts or take any fraudulent action in order to have the rental housing license issued for three (3) units in 4212 Knox Road.

(B) If, at the time of the permit's issuance, no appeal or controversy regarding its issuance was pending before any body;

The Board of Appeals, when contacted on August 2, 2016, confirmed that there are no records of any appeals concerning the subject property. Thus, there were no appeals or controversies as to the issuance of the rental housing licenses.

(C) The applicant acted in good faith, expending funds or incurring obligations in reliance on the permit; and

Mr. Bahrami and Soraya Bahrami have expended over $409,860 to purchase the three (3) unit building, to pay the mortgage, the utility bills and maintain the property based on their reliance on the rental housing license that permitted rental of three (3) units.

(D) The validation will not be against the public interest.

Validation will not be against the public interest as sound, rental housing is provided, which has existed in this configuration since the 1960's and the subject property blend in with the surrounding properties and do not alter the character of the neighborhood.

IV. CONCLUSION

The instant Application fulfills the requirements of §27-258(g) of the Zoning Ordinance. The 4212 Knox Road property, has been licensed by the City of College Park for three (3) dwelling units since at least 1970 pursuant to Multi-Family Rental Licenses issued by the City of College Park. The Applicant has applied for a Use and Occupancy Permit for the subject property. Therefore, certification as a non-conforming use, in accordance with §27-258(h) is requested as a result of the validation of rental housing license No.14-00002553. Hence, approval of validation of multi-family housing license No. 14-00002553 is requested.

Very truly yours,

Michele La Rocca, Esq.

Cc: Manucher Bahrami
w/o enclosures

THE MARYLAND-NATIONAL CAPITAL PARK AND PLANNING COMMISSION
PERMIT REVIEW SECTION
14741 Governor Oden Bowie Drive, Upper Marlboro Md. 20772

Permit Reviewer:	Michelle Hughes	24976-2015-U thru 24979-2015-U
Telephone Number:	(301) 952-5409	June 22, 2015
Fax Number:	(301) 952-4141	
Permit Status:	www.mncppc.org	

The following comments were generated from permit review. Any questions or concerns regarding the following comments should be directed to the reviewer. For permit status, please direct your call to the appropriate phone number provided above.

Further review and comments may be generated when the appropriate or additional information has been submitted.
Revised plans and required information must be submitted to the Permit Review Section.

1. These permits are for 2 apartment buildings located at 4210 and 4214 Knox Road. The property is zoned M-U-I and also located within the Central US 1 Corridor Development District Overlay Zone which permits multifamily dwelling as of June 2010. The buildings were constructed in 1953 per tax assessment. The property was zoned R-18 at this time. There are 3 dwelling units in each building and all are 2 bedroom units. **HISTORY:** *Each lot contains 5200 s.f. which provides a density of 25.2 du/acre. This exceeds the current maximum density of the R-18 Zone which is 12 units per acre. The buildings also exceed maximum bedroom percentages because 100% are two bedrooms but is permitted per US 1 corridor for in excess of applicable bedroom percentages. The apartments were constructed prior to the adoption of bedroom percentages in 1968 and prior to current density requirements. Per the applicability section of the Central US 1 Corridor DDOZ* ***legally existing uses*** *or uses which could have been certified are permitted to continue and are not nonconforming. Therefore if the properties were in compliance with the Zoning Ordinance in effect in 1953 and in continuous operation the building could be grandfathered. However at the time of construction in 1953 a minimum of 1,800 square of lot area was required per dwelling unit which would have only allowed 2 dwelling units. The buildings also would have required 3 off street parking spaces and only 2 spaces legally exist on the site based on a required size of 9' x 20' or 10' x 20'. Per information provided by the City of College Park during the review of other similar buildings in the area these buildings were originally constructed as 2 units in each building. Then in early the 1960's, a third unit was placed in the basement. At this time these properties* ***did not*** *contain adequate land area to meet the minimum net lot area for 3 units nor was the minimum off street parking spaces provided.* ***Therefore the 3 units were not lawful and cannot be grandfathered.*** Are there any issued rental licenses for three units for this property? Per Tim Holden of the Prince George's County Enforcement Division there are no licenses for these properties. Therefore it appears that the apartments cannot pursue certification of nonconforming use or Validation of Apartment License in Error since a valid apartment license was not issued for the 3 units. Detailed Site plan approval is required due to the 3 units not being legally existing. The applicant should contact Cheryl Summerlin at 301-952-3578 for information on this process.

Permit comments emailed to Cameran Bahrami (owner/applicant) at cameran@bahramilegal.com.

RECEIVED
AUG 11 2016
OFFICE OF ZONING EXAMINER

6/24/15 – I discussed permit comments with Cameran Bahrami. I referred him to Cheryl Summerlin for DSP process.

7/25/16 – Andy Facchina came into the office to get a copy of the submitted site plans. Would like to pursue validation of a rental license issued in error through the City of College Park. I told him we can only pursue this process with an issued license from the county. He will check into it.

RECEIVED
AUG 1 1 2016
OFFICE OF THE PRINCIPAL PLANNING EXAMINER
PRINCE GEORGE'S CTY., MD

LAW OFFICES

MEYERS, RODBELL
& ROSENBAUM, P.A.

WILLIAM V. MEYERS *
RUSSELL E. WARFEL
LINDA C. BAHRAMI
JOSEPH B. CHAZEN
MICHELE LA ROCCA*
PAUL A. TURKHEIMER*
EDWARD S. MARIN *#
GINA M. SMITH*
M. EVAN MEYERS*
DAVID J. MARTIN*
DOUGLAS C. MEISTER+☼
MICHAEL R. ACKER*∀☼

JENNIFER M. VALINSKI
SAMUEL T. WOLF *
SANDRA B. STALZER *
CHRISTOPHER M. BALABAN
EMMANUEL A. FISHELMAN *
KAYANN S. CHAMBERS

+ *Also Admitted in Virginia*
* *Also Admitted in D.C.*
∀ *Also Admitted in Pennsylvania*
Also Admitted in New York
☼ *Also Admitted in West Virginia*

ROBERT H. ROSENBAUM*
Of Counsel

PAUL B. RODBELL
(1947-2001)

Please Respond to the Riverdale Address

6801 KENILWORTH AVENUE, SUITE 400
RIVERDALE PARK, MARYLAND 20737-1385
(301) 699-5800 FAX (301) 779-5746
EMAIL: billing@mrrlaw.net

9801 WASHINGTONIAN BLVD, SUITE 750
GAITHERSBURG, MARYLAND 20850
(301) 738-7061 FAX (301) 738-7065
EMAIL: admin@mrrlaw.net

RECEIVED
AUG 11 2016
OFFICE OF ZONING EXAMINER
PRINCE GEORGE'S CTY., MD

August 9, 2016

Hand Delivered
Office of the Zoning Hearing Examiner
c/o Ms. Susie Rawlings
County Administration Building
14741 Governor Oden Bowie Drive
Upper Marlboro, MD 20772

RE: Manucher Bahrami and Cameran Bahrami
4214 Knox Road, College Park, Maryland 20740
Validation of Permit Issued in Error No. 15-00000961

Dear Madam Examiner:

Please be advised that I represent one of the owners and applicant, Manucher Bahrami, regarding property located at 4214 Knox Road, College Park, Maryland 20740.

The following constitutes the Statement of Justification for the request, of a validation permit issued in error for 4214 Knox Road, specifically rental housing license No. 15-00000961.

I. OVERVIEW

(A) History:

The subject property was developed in 1953 from unimproved land and constructed with a two (2) story brick and frame structure. At the time of construction, the building consisted of two (2) apartment units and included a basement. In the late 1960's, the basement was finished creating an additional unit, bringing the total number of dwelling units per building to three (3).

The apartment building existed prior to the adoption of the 1968 bedroom percentages and prior to current density requirements, which now cause the property to be non-conforming.

Since the late 1960s, the building has been operating as a three (3) unit apartment building. On August 9, 1993, the Applicant and Thomas Kearns purchased the property. In November 19, 2013, the property was transferred jointly to Manucher Bahrami and Cameran Bahrami. Since the August 9, 1993, purchase date, the Applicant has maintained and operated the subject property continuously as a three (3) unit apartment building

(B) Master Plan:

The property 4214 Knox Road, is located within *the Central US 1 Corridor Development District Overlay Zone*.

(C) Surrounding Uses:

The subject property is surrounded by residential use. To the immediate Southwest, is 4205 Knox Road, a six (6) unit apartment building that has been certified as non-conforming use. West of the property is a fifteen (15) unit apartment building located at 4206 Knox Road that has been certified as non-conforming use. The surrounding buildings are relatively similar to the subject property and have been used as multifamily apartments since they were built.

South of the subject property is an apartment building located at 4201 Knox Road, submitted in the record as Exhibit # 8 (e-f).

II. SUPPORTING DOCUMENTS ATTACHED HERETO:

(A) Applicant has applied for the use and occupancy permit No. 24978-2015-00 for the subject property. These are submitted in the record as Exhibit # 1.

(B) Site plan that includes the building layout of the configuration of the three (3) units and is submitted in the record as Exhibit # 2.

(C) Property plat which is submitted in the record as Exhibit # 3.

(D) In 1993, the Applicant and Thomas Kearns expended monies to purchase the subject property as evidenced by the Deed submitted into the record as Exhibit # 4 and according to the SDAT information sheet which is submitted as Exhibit # 5.

(E) Applicant has expended funds on the subject property to pay the property taxes, and to maintain and operate the three (3) rental units. These are submitted in the record as Exhibit # 6 and indicated as follows:

- 2015 and 2014 income tax returns reflecting rent received and expenses incurred for subject property
- Prince George's County Land Tax bill dated July 25, 2015
- Washington Suburban Sanitary Commission ("WSSC") water and sewer bills for August 18, 2014 – March 27, 2015 and December 15, 2015 – March 15, 2016
- Allstate residential insurance bill for three (3) dwelling unit

- Washington Gas: A WGL Company bill for September 3, 2015 and March 8, 2016;
- Residential lease agreements for unit 4212-C dated August 30, 2015.
- Invoices received via email for maintenance work performed on the subject property

(F) The City of College Park permits - The City of College Park has issued rental housing licenses for three (3) dwelling units located on the subject property since 1968 (permit No. 60) – August 18, 2014 (permit No. 15-00000961). The permits are submitted in the record as Exhibit # 7.

(G) Photographs of 4214 Knox Road, including street view, submitted in the record as Exhibit # 8 (a-d).

(H) M-NCPPC's permit comments - M-NCPPC (Michelle Hughes) reviewed the use & occupancy permit for this property. It was then realized that a validation of a permit issued in error is necessary for the use & occupancy permit to be approved as the building was built with two (2) dwelling units and the third unit was added in the late 1960's. Submitted in the record as Exhibit # 9.

III. CRITERIA FOR VALIDATION OF A PERMIT ISSUED IN ERROR IS SATISFIED

A Permit may be validated as issued in error in accordance with §27-258(g) of the Zoning Ordinance. §27-258(g) states in pertinent part:

1) The District Council shall only approve the application if:

(A) No fraud or misrepresentation had been practiced in obtaining the permit;

No fraud or misrepresentation was practiced in obtaining the City of College Park rental housing licenses. Mr. Bahrami nor did Cameran Bahrami, misrepresent any facts or take any fraudulent action in order to have the rental housing license issued for three (3) units in 4214 Knox Road.

(B) If, at the time of the permit's issuance, no appeal or controversy regarding its issuance was pending before any body;

The Board of Appeals, when contacted on August 2, 2016, confirmed that there are no records of any appeals concerning the subject property. Thus, there were no appeals or controversies as to the issuance of the rental housing licenses.

(C) The applicant acted in good faith, expending funds or incurring obligations in reliance on the permit; and

Mr. Bahrami expended over $185,000 to purchase the three (3) unit building, paying the mortgage, utility bills and maintaining the property on reliance on the rental housing license that permitted rental of three (3) units.

(D) The validation will not be against the public interest.

Validation will not be against the public interest as sound, rental housing is provided, which has existed in this configuration since the 1960's and the subject property blend in with the surrounding properties and do not alter the character of the neighborhood.

IV. CONCLUSION

The instant Application fulfills the requirements of §27-258(g) of the Zoning Ordinance. The 4214 Knox Road property, have been licensed by the City of College Park for three (3) dwelling units since at least 1968 pursuant to Multi-Family Rental Licenses issued by the City of College Park. The Applicant has applied for a Use and Occupancy Permit for the subject property. Therefore, certification as a non-conforming use, in accordance with §27-258(h) is requested as a result of the validation of rental housing license No. 15-00000961. Hence, approval of validation of multi-family housing license No. 15-00000961 is requested.

Very truly yours,

Michele La Rocca, Esq.

Cc: Manucher Bahrami
w/o enclosures

THE MARYLAND-NATIONAL CAPITAL PARK AND PLANNING COMMISSION
PERMIT REVIEW SECTION
14741 Governor Oden Bowie Drive, Upper Marlboro Md. 20772

Permit Reviewer:	Michelle Hughes	24976-2015-U thru 24979-2015-U
Telephone Number:	(301) 952-5409	June 22, 2015
Fax Number:	(301) 952-4141	
Permit Status:	www.mncppc.org	

RECEIVED
AUG 11 2016
OFFICE OF ZONING EXAMINER
PRINCE GEORGE'S CTY., MD

The following comments were generated from permit review. Any questions or concerns regarding the following comments should be directed to the reviewer. For permit status, please direct your call to the appropriate phone number provided above.

Further review and comments may be generated when the appropriate or additional information has been submitted.
Revised plans and required information must be submitted to the Permit Review Section.

1. These permits are for 2 apartment buildings located at 4210 and 4214 Knox Road. The property is zoned M-U-I and also located within the Central US 1 Corridor Development District Overlay Zone which permits multifamily dwelling as of June 2010. The buildings were constructed in 1953 per tax assessment. The property was zoned R-18 at this time. There are 3 dwelling units in each building and all are 2 bedroom units. **HISTORY:** *Each lot contains 5200 s.f. which provides a density of 25.2 du/acre. This exceeds the current maximum density of the R-18 Zone which is 12 units per acre. The buildings also exceed maximum bedroom percentages because 100% are two bedrooms but is permitted per US 1 corridor for in excess of applicable bedroom percentages. The apartments were constructed prior to the adoption of bedroom percentages in 1968 and prior to current density requirements. Per the applicability section of the Central US 1 Corridor DDOZ* ***legally existing uses*** *or uses which could have been certified are permitted to continue and are not nonconforming. Therefore if the properties were in compliance with the Zoning Ordinance in effect in 1953 and in continuous operation the building could be grandfathered. However at the time of construction in 1953 a minimum of 1,800 square of lot area was required per dwelling unit which would have only allowed 2 dwelling units. The buildings also would have required 3 off street parking spaces and only 2 spaces legally exist on the site based on a required size of 9' x 20' or 10' x 20'. Per information provided by the City of College Park during the review of other similar buildings in the area these buildings were originally constructed as 2 units in each building. Then in early the 1960's, a third unit was placed in the basement. At this time these properties* ***did not*** *contain adequate land area to meet the minimum net lot area for 3 units nor was the minimum off street parking spaces provided.* ***Therefore the 3 units were not lawful and cannot be grandfathered.*** Are there any issued rental licenses for three units for this property? Per Tim Holden of the Prince George's County Enforcement Division there are no licenses for these properties. Therefore it appears that the apartments cannot pursue certification of nonconforming use or Validation of Apartment License in Error since a valid apartment license was not issued for the 3 units. Detailed Site plan approval is required due to the 3 units not being legally existing. The applicant should contact Cheryl Summerlin at 301-952-3578 for information on this process.

Permit comments emailed to Cameran Bahrami (owner/applicant) at cameran@bahramilegal.com.

ERR 260- ZHE EXHIBIT # 23

6/24/15 – I discussed permit comments with Cameran Bahrami. I referred him to Cheryl Summerlin for DSP process.

7/25/16 – Andy Facchina came into the office to get a copy of the submitted site plans. Would like to pursue validation of a rental license issued in error through the City of College Park. I told him we can only pursue this process with an issued license from the county. He will check into it.

LAW OFFICES

MEYERS, RODBELL
& ROSENBAUM, P.A.

WILLIAM V. MEYERS *
RUSSELL E. WARFEL
LINDA C. BAHRAMI
JOSEPH B. CHAZEN
MICHELE LA ROCCA*
PAUL A. TURKHEIMER*
EDWARD S. MARIN *#
GINA M. SMITH*
M. EVAN MEYERS*
DAVID J. MARTIN*
DOUGLAS C. MEISTER+☼
MICHAEL R. ACKER*∀☼

JENNIFER M. VALINSKI
SAMUEL T. WOLF *
SANDRA B. STALZER *
CHRISTOPHER M. BALABAN
EMMANUEL A. FISHELMAN *
KAYANN S. CHAMBERS

+ *Also Admitted in Virginia*
* *Also Admitted in D.C.*
∀ *Also Admitted in Pennsylvania*
Also Admitted in New York
☼ *Also Admitted in West Virginia*

ROBERT H. ROSENBAUM*
Of Counsel

PAUL B. RODBELL
(1947-2001)

Please Respond to the Riverdale Address

6801 KENILWORTH AVENUE, SUITE 400
RIVERDALE PARK, MARYLAND 20737-1385
(301) 699-5800 FAX (301) 779-5746
EMAIL: billing@mrrlaw.net

9801 WASHINGTONIAN BLVD, SUITE 750
GAITHERSBURG, MARYLAND 20850
(301) 738-7061 FAX (301) 738-7065
EMAIL: admin@mrrlaw.net

RECEIVED
AUG 11 2016
OFFICE OF ZONING EXAMINER
PRINCE GEORGE'S CTY., MD

August 9, 2016

Hand Delivered
Office of the Zoning Hearing Examiner
c/o Ms. Susie Rawlings
County Administration Building
14741 Governor Oden Bowie Drive
Upper Marlboro, MD 20772

RE: Manucher Bahrami and Cameran Bahrami
4210 Knox Road, College Park, Maryland 20740
Validation of Permit Issued in Error No. 14-00000964

Dear Madam Examiner:

Please be advised that I represent one of the owners and applicant, Manucher Bahrami, regarding property located at 4210 Knox Road, College Park, Maryland 20740.

The following constitutes the Statement of Justification for the request, of validation permit issued in error No. 14-00000964.

I. OVERVIEW

(A) History:

The subject property was developed in 1953 from unimproved land and constructed with a two (2) story brick and frame structure. At the time of construction, the building consisted of two (2) apartment units and included a basement. In the early 1960's, the basement was finished creating an additional unit, bringing the total number of dwelling units per building to three (3).

The apartment building existed prior to the adoption of the 1968 bedroom percentages and prior to current density requirements, which now cause the property to be non-conforming.

Since the late 1960s, the subject property has been operating as a three (3) unit apartment building. On August 7, 1992, the applicant and Thomas Kearns jointly purchased the property. On November 19, 2013, the property was transferred jointly to Manucher Bahrami and Cameran

Bahrami. Since the August 7, 1993, purchase date, the Applicant has maintained and operated the property continuously a three (3) unit apartment building.

(B) Master Plan:

RECEIVED
AUG 11 2016
OFFICE OF ZONING EXAMINER
PRINCE GEORGE'S CTY., MD

The property, 4210 Knox Road, is located within *the Central US 1 Corridor Development District Overlay Zone*.

(C) Surrounding Uses:

The subject property is surrounded by residential use. To the immediate Southwest, is 4205 Knox Road, a six (6) unit apartment building that has been certified as non-conforming use. West of the property is a fifteen (15) unit apartment building located at 4206 Knox Road that has been certified as non-conforming use. The surrounding buildings are relatively similar to 4210 Knox Road, and have been used as multifamily apartments since they were built.

South of 4210 Knox Road is an apartment building located at 4201 Knox Road, submitted in the record as Exhibit # 8 (d-e).

II. SUPPORTING DOCUMENTS ATTACHED HERETO:

(A) Applicant has applied for the use and occupancy permit No. 24976-2015-00 for the subject property. This is submitted in the record as Exhibit # 1.

(B) Site plan that includes building layout of the configuration of the three (3) units in the subject property is submitted in the record as Exhibit # 2.

(C) Property plat which is submitted in the record as Exhibit # 3.

(D) Applicant and Thomas Kearns expended monies in 1992 to purchase the subject property as evidenced by the Deed submitted into the record as Exhibit # 4 (a-b) and according to the SDAT account information which is submitted as Exhibit # 5.

(E) Applicant has expended funds on the subject property to pay the property taxes, in maintaining the subject structure and operating the three rental units on the property. These are submitted in the record as Exhibit # 6 and indicated as follows:

- Washington Gas bill for September 23, 2015 and Mach 8, 2016;
- Washington Suburban Sanitary Commission ("WSSC") water and sewer bill for 12/15/15 – 3/15/16 billing period and 12/18/14 - 3/2715 billing periods;
- Allstate Insurance coverage bill; and
- Prince George's County Land Tax bill dated 7/25/2015.

(F) The City of College Park permits - The City of College Park has issued rental housing licenses for three (3) dwelling units located at 4210 Knox Road since August 3, 1968 (permit No. 93) – March 31, 2015 (permit No. 14-00000964). These are submitted in the record as Exhibit # 7.

(G) Photographs of 4210, including street view, submitted in the record as Exhibit # 8 (a-c).

(H) M-NCPPC's permit comments - M-NCPPC (Michelle Hughes) reviewed the use & occupancy permit for the property. It was then realized that a validation of a permit issued in error is necessary for the use & occupancy permit to be approved as the building was built with two (2) dwelling units and the third unit was added in the late 1960's. Submitted in the record as Exhibit # 9.

III. CRITERIA FOR VALIDATION OF A PERMIT ISSUED IN ERROR IS SATISFIED

A Permit may be validated as issued in error in accordance with §27-258(g) of the Zoning Ordinance. §27-258(g) states in pertinent part:

1) The District Council shall only approve the application if:

(A) No fraud or misrepresentation had been practiced in obtaining the permit;

No fraud or misrepresentation was practiced in obtaining the City of College Park rental housing licenses. Mr. Bahrami nor did his son, Cameran Bahrami, misrepresent any facts or take any fraudulent action in order to have the rental housing license issued for three (3) units in the subject property.

(B) If, at the time of the permit's issuance, no appeal or controversy regarding its issuance was pending before any body;

The Board of Appeals, when contacted on August 2, 2016, confirmed that there are no records of any appeals concerning the subject property. Thus, there were no appeals or controversies as to the issuance of the rental housing licenses.

(C) The applicant acted in good faith, expending funds or incurring obligations in reliance on the permit; and

Mr. Bahrami and his son, Cameran Bahrami, have expended funds in paying the mortgage, utility bills and maintaining the property in reliance on the rental housing license to allow for the rental of a total three (3) units.

(D) The validation will not be against the public interest.

Validation will not be against the public interest as sound, rental housing is provided, which has existed in this configuration since the 1960's and the subject property blend in with the surrounding properties and do not alter the character of the neighborhood.

IV. CONCLUSION

The instant Application fulfills the requirements of §27-258(g) of the Zoning Ordinance. The property located at 4210 Knox Road, have been licensed by the City of College Park for three dwelling units since at least 1968 pursuant to Multi-Family Rental Licenses issued by the City of College Park. The Applicant has applied for a Use and Occupancy Permit for the subject

property. Therefore, certification as a non-conforming use, in accordance with §27-258(h) is requested as a result of the validation of rental housing license No. 14-00000964. Hence, approval of validation of multi-family housing license No. 14-00000964 is requested.

Very truly yours,

Michele La Rocca, Esq.

Cc: Manucher Bahrami
w/o enclosures

THE MARYLAND-NATIONAL CAPITAL PARK AND PLANNING COMMISSION
PERMIT REVIEW SECTION
14741 Governor Oden Bowie Drive, Upper Marlboro Md. 20772

Permit Reviewer:	Michelle Hughes	24976-2015-U thru 24979-2015-U
Telephone Number:	(301) 952-5409	June 22, 2015
Fax Number:	(301) 952-4141	
Permit Status:	www.mncppc.org	

The following comments were generated from permit review. Any questions or concerns regarding the following comments should be directed to the reviewer. For permit status, please direct your call to the appropriate phone number provided above.

Further review and comments may be generated when the appropriate or additional information has been submitted.
Revised plans and required information must be submitted to the Permit Review Section.

1. These permits are for 2 apartment buildings located at 4210 and 4214 Knox Road. The property is zoned M-U-I and also located within the Central US 1 Corridor Development District Overlay Zone which permits multifamily dwelling as of June 2010. The buildings were constructed in 1953 per tax assessment. The property was zoned R-18 at this time. There are 3 dwelling units in each building and all are 2 bedroom units. **HISTORY:** *Each lot contains 5200 s.f. which provides a density of 25.2 du/acre. This exceeds the current maximum density of the R-18 Zone which is 12 units per acre. The buildings also exceed maximum bedroom percentages because 100% are two bedrooms but is permitted per US 1 corridor for in excess of applicable bedroom percentages. The apartments were constructed prior to the adoption of bedroom percentages in 1968 and prior to current density requirements. Per the applicability section of the Central US 1 Corridor DDOZ* ***legally existing uses*** *or uses which could have been certified are permitted to continue and are not nonconforming. Therefore if the properties were in compliance with the Zoning Ordinance in effect in 1953 and in continuous operation the building could be grandfathered. However at the time of construction in 1953 a minimum of 1,800 square of lot area was required per dwelling unit which would have only allowed 2 dwelling units. The buildings also would have required 3 off street parking spaces and only 2 spaces legally exist on the site based on a required size of 9' x 20' or 10' x 20'. Per information provided by the City of College Park during the review of other similar buildings in the area these buildings were originally constructed as 2 units in each building. Then in early the 1960's, a third unit was placed in the basement. At this time these properties* ***did not*** *contain adequate land area to meet the minimum net lot area for 3 units nor was the minimum off street parking spaces provided.* ***Therefore the 3 units were not lawful and cannot be grandfathered.*** Are there any issued rental licenses for three units for this property? Per Tim Holden of the Prince George's County Enforcement Division there are no licenses for these properties. Therefore it appears that the apartments cannot pursue certification of nonconforming use or Validation of Apartment License in Error since a valid apartment license was not issued for the 3 units. Detailed Site plan approval is required due to the 3 units not being legally existing. The applicant should contact Cheryl Summerlin at 301-952-3578 for information on this process.

Permit comments emailed to Cameran Bahrami (owner/applicant) at cameran@bahramilegal.com.

RECEIVED
AUG 11 2016
OFFICE OF ZONING

ERR-259 ZHE EXHIBIT # 19

6/24/15 – I discussed permit comments with Cameran Bahrami. I referred him to Cheryl Summerlin for DSP process.

7/25/16 – Andy Facchina came into the office to get a copy of the submitted site plans. Would like to pursue validation of a rental license issued in error through the City of College Park. I told him we can only pursue this process with an issued license from the county. He will check into it.

RECEIVED
AUG 11 2016
OFFICE OF ZONING EXAMINER
PRINCE GEORGE'S CTY., MD

7

48-hour prohibited continuous parking rule

CITY OF COLLEGE PARK, MARYLAND
WORKSESSION AGENDA ITEM

Prepared By: Robert W. Ryan, Public Services Director

Meeting Date: October 18, 2016

Presented By: Robert W. Ryan, Public Services Director

Proposed Consent Agenda: No

Originating Department: City Council

Issue Before Council: Consider Changes Regarding the "48 Hour Continuous Parking" restriction.

Strategic Plan Goal: Goal 6: Excellent Services

Background/Justification:
In accordance with Chapter 184-7.A of the Code of the City of College Park (Continuous Parking Prohibited), it shall be unlawful for any person to park any automobile or other vehicle on any of the streets of College Park for a continuous period of more than 48 hours at any one time, unless an oral or written permit for the same shall have been obtained from the City Manager. Such permit shall be issued only for good cause and for a period not exceeding 14 days, unless a written permit for a longer period shall have been granted by action of the Mayor and Council, and such permit shall be granted only for good cause.

In order to enforce the City Code, the '48 Hour Limit' ordinance is enforced either, upon the receipt of a resident complaint, which is specific to one or more vehicles, and with as detailed a description of the subject vehicle(s) as possible, or, when a parking officer, upon observation, initiates a tracking record for a vehicle that:

a. has been illegally parked in some manner, in accordance with the City Code for two (2) or more consecutive days, and remains unmoved and in violation;
b. is displaying either no tags, expired tags, or expired temporary tags; or
c. has one or more flat tires and/or major body damage that deems it inoperable, to consider as possible abandonment.

Should the City receive either a resident complaint specific to one or more vehicles for suspected violation of this Ordinance, or should any of the criteria exist to warrant a parking officer to initiate a tracking record on a given vehicle, a warning under the '48 Hour limit' Ordinance is first issued, and the tires chalked. If after forty eight (48) hours has passed from the time the warning was first issued, and the subject vehicle remains unmoved, the parking officer then cites the vehicle for a violation, and files a request for impoundment.

If, upon receipt of the impound request, a record of the most recent registered owner can be obtained from the Maryland MVA, then a certified letter must be sent advising the vehicle owner of the violation and location of the vehicle, with a scheduled impound date of seven (7) calendar days from the date of the letter should the vehicle remain illegally parked. Thereafter, a parking citation for the '48 Hour Limit' Ordinance may be issued every twenty four (24) hours until the subject vehicle owner either corrects the violation, or the vehicle is impounded.

If upon receipt of the impound request no registration records can be obtained, the subject vehicle is then considered to be abandoned, and may be impounded immediately upon issuance of the first parking citation. Normally, upon receipt of a resident complaint, it would take at least nine (9) days before an otherwise legally parked and registered vehicle would be towed. Accommodations for residents away from home for an extended period are currently made through the process described in the Code for City Manager or Council permission.

Staff believes the current "48-hour" rule is generally working to provide for removal of abandoned vehicles from City streets, and to accommodate resident complaints. Some residents have expressed concern that a vehicle may end up being towed as the result of a complaint reporting their vehicle in violation either while they are

away from home for an extended period, or merely have not used their vehicle in over 48 hours. Staff believes this is unlikely given the warnings posted on vehicles and length of time before towing, and Code allowances for long term Manager and Council permission.

At the June 7, 2016 Worksession, Mayor Wojahn and Council Members requested staff to explore ways of allowing residents to park within a certain distance of their homes and not be subject to the 48 hour restriction if the vehicle is legally parked, properly registered, and fully operable. At the time of the discussion, it appeared that a resolution of this issue would involve amendment of the Code section. Public Services staff have discussed this issue with the City Attorney, and believe a simpler and more flexible solution may exist by modifying the enforcement procedures for the "48 Hour" Ordinance. Instead of amending the law to achieve what has been proposed, staff suggests that the complaint only practice be changed to also include a practice that residents will not be cited for continuous parking over 48 hours if the vehicle is parked within approximately one block of the owner's residence. This will achieve the same purpose of avoiding a citation and possible towing for a vehicle parked close to a resident's home, but also allow discretion to warn or cite in those circumstances where it may be appropriate, such as when a vehicle owner parks for an extended period directly in front of someone else's house, albeit within the same block, and generates a complaint by that owner. Instead of a code amendment, this practice change might provide the solution. Mayor and Council can agree to support the City Manager and parking Enforcement staff to enforce the law in this manner. This practice would then be in place unless and until changed by the City Manager, or Mayor and Council.
This proposal would simplify the enforcement process and better accommodate residents who minimize the use of their vehicles.

Fiscal Impact:
None

Council Options:
#1: Support a practice change to exempt vehicles continuously parked within one block of the owner's residence from the application of the 48 hour rule in §184-7.
#2: Advise staff to make no change in practice and continue current enforcement of the 48-hour continuous parking prohibition.

Staff Recommendation:
#1

Recommended Motion:
None Required

Attachments:
1. Chapter 184, Subsection 7(A) of the Code of the City of College Park.

8

Honorary status for Board or Committee members

CITY OF COLLEGE PARK, MARYLAND
WORKSESSION AGENDA ITEM

Prepared By: Janeen S. Miller
City Clerk

Meeting Date: 10/18/2016

Presented By: Janeen S. Miller

Proposed Consent Agenda: No

Originating Department: Mayor and Council

Issue Before Council: Creating an "Honorary Member" category for certain Board members

Strategic Plan Goal: Goal 5 - Effective Leadership

Background/Justification:
At the September 6, 2016 Worksession, Council discussed the possibility of designating certain Board, Committee, Commission or Authority ("Board") members who are no longer able to attend meetings as "honorary" members of the Board. I suggest the following approach:

- The honorary member designation would be conferred upon a Board member by vote of the City Council in certain circumstances. For instance, the individual may have been a founding member of the Board, may have been the long-serving Chair of the Board, may have a unique connection to the Board that we don't want to lose, or may have significant institutional memory that remains beneficial to the Board. Other criteria could apply.

- Honorary members would not be part of the official roster of the board and they would not have a vote. Their attendance would not be required at Board meetings and their presence or absence would not impact the quorum requirement. Honorary members will be invited to participate in Board meetings in any way or as often as they can. They would not be required to complete annual financial disclosure statements (the Disclosure of Gifts or Conflict of Interest forms).

- To facilitate this approach, the Mayor and Council should adopt an enabling Resolution defining "Honorary Member" using some or all of the suggestions above.

- Once the Resolution is adopted, Council may propose a certain individual to be an Honorary Member through a General Motion approved by majority vote.

Fiscal Impact:
None.

Council Options:
#1: Direct staff to draft a Resolution as described above establishing an "Honorary Member" category of Board member
#2: Discuss and further refine the criteria to be used before proceeding
#3: Take no action at this time

Staff Recommendation:
Staff will take direction from Council

Recommended Motion:
N/A

Attachments:
None.

9

FY ’18 M-NCPPC Budget Requests

CITY OF COLLEGE PARK, MARYLAND
WORKSESSION AGENDA ITEM

Prepared By:	Bill Gardiner Assistant City Manager	**Meeting Date:**	October 18, 2016
Presented By:	Bill Gardiner	**Proposed Consent Agenda:**	No

Originating Department: Administration

Issue Before Council: Council Request Regarding M-NCPPC FY18 Budget

Strategic Plan Goal: Goal 4 - Quality Infrastructure

Background/Justification:
The Prince George's County Planning Board of The Maryland-National Capital Park and Planning Commission (M-NCPPC) has scheduled two public forums this fall to solicit comments on the Commission's budget for planning, parks, and recreation in Prince George's County for the next fiscal year, which begins July 1, 2017.

Written comments will be accepted until close of business, Friday, October 28, 2016.

Representatives from the M-NCPPC attended a community meeting in College Park to discuss the options to improve the Hollywood Park, and a number of residents and Councilmembers attended. Council may wish to take this opportunity to request funding to improve, rehabilitate, and/or expand specific parks in the City, or to fund other projects (transportation management studies, parking districts, etc.) that would benefit College Park.

Fiscal Impact:
None

Council Options:
1. Discuss and identify requests to include funding in the FY18 M-NCPPC budget, and authorize the Mayor to send correspondence on behalf of the City to M-NCPPC.

2. Decline to provide comment at this time.

Staff Recommendation:
#1

Recommended Motion:
N/A

Attachments:
1 – Request from the North College Park Civic Association

Report of NCPCA Committee
on Proposed Stormwater Management Pond and Changes
to Recreational Uses in M-NCPPC Hollywood Neighborhood Park

Final Report for Presentation
October 11, 2016

1. **Charge and Process.**

Formation. The Committee was formed at the September 8th NCPCA meeting to review a concept plan presented by M-NCPPC / Soltesz Engineering which included a large stormwater pond and changes to existing uses of Hollywood Park. The Committee was charged to review the concept plan and develop comments for future Park improvements on behalf of NCPCA. The appointed Committee Members were Mark Shroder, Matt Dernoga, Christine O'Brien, Dave Pfeiffer, and John Krouse who served as Chair.

1st Meeting - September 19th. The full Committee met with City Councilmember Fazlul Kabir at Hollywood Park to review the existing recreational facilities, drainage ways and natural areas of Hollywood Park, and to consider future recreational uses, potential improvements to Park facilities, and possible strategies for TMDL water quality treatment credit in various areas of the Park.

2nd Meeting - October 7th. Christine O'Brien, Dave Pfeiffer, Mark Shroder and John Krouse met with Park Planner Eileen Nivera and three M-NCPPC park planning and maintenance staff. Also in attendance were Joe Smith, Chair of College Park Tree & Landscape Board, City Councilmembers Fazlul Kabir, Christine Nagle, and Mary Cook. Imran Khan and Lisa Ealley participated as guests. The agenda included discussion of existing Park features that should be preserved, ideas for future recreational improvements, and alternative concepts for water quality treatment credit. No new information regarding the design of the proposed stormwater pond was presented.

Final Report - October 11th. This report was developed with concurrence of the Committee Members for presentation at the NCPCA meeting on October 13th.

2. **Review Materials.** Three documents were provided to the Committee, and they are attached.

   a. **Plan.** A plan provided by Soltesz showed the site of a proposed stormwater pond with a large area of forest clearing, as well as the site of a relocated picnic pavilion, a new turfgrass play area, walking trails and tree plantings. Individual tree removals were not shown.

   b. **Maps.** Two maps provided by Steve Halpern, City Engineer of College Park, identify the drainage area, inlets, pipes and path of stormwater as it flows through the Park and into the large Metro pond on the east side of the railroad tracks.

3. **Findings.** The Committee made several findings:

   a. **Stormwater Pond.** The proposed open stormwater management pond involves an area of ± 1.5 acres, including areas required for excavation and grading.

      - The Committee believes that construction within the proposed limits would remove approximately 40 mature trees, many of which are over 2 ft. in diameter, and most of which are over 60 ft. tall.

- The Committee noted several likely negative impacts of the proposed pond, including the creation of water hazards, increased mosquito populations, the entrapment of stormwater debris and litter in pond areas, and the need for consistent maintenance to prevent nuisances.

- The Committee is concerned that the extensive loss of mature trees and forest canopy to construct the pond would increase light, noise and visual impacts from the adjacent Metro station and railroad, and that all of these negative factors were detrimental to Park patrons and to nearby residential areas.

- The Committee believes that a new pond in Hollywood Park would provide substantially similar water treatment to the existing Metro pond. Rather than providing additional environmental benefits, the Committee feels that the proposed pond would destroy valuable environmental and community assets, impair the character of the Park, and significantly reduce both active and passive recreational uses of the Park.

- On balance, the Committee feels that the destruction of the picnic pavilion and the large trees and natural forest that surround it is unacceptable, and that an open stormwater pond is an incompatible use within the context of Hollywood Neighborhood Park.

b. Alternative Water Treatment Strategies. The Committee recommends the following strategies to enhance Hollywood Neighborhood Park, improve water quality, and obtain TMDL water quality credit. These strategies are suggested as acceptable alternatives to the proposed stormwater management pond.

- **Tree Planting.** Many trees have been lost in the Park through the years, and increased plantings at forest edges and within new and existing naturalized areas would increase the forest canopy, provide TMDL water quality credit, and provide additional screening to reduce noise and light pollution into the Park and nearby homes from Metro and railroad areas.

- **Turfgrass.** Large bare soil areas near the baseball field and basketball courts do not have adequate turfgrass groundcover and are eroding. The area around the stormwater inlet behind the baseball field is in poor condition, and all of these areas could be regraded and restored with topsoil and turfgrass to improve function, aesthetics and water quality.

- **Impervious Pavement.** A large area of abandoned asphalt pavement in the northeast corner of the Park, which may have formerly been a basketball court, could be removed and native trees could be planted for TMDL water quality credit.

- **West Side of Parking Lot.** Infiltration rain gardens with native plantings and subdrains into the nearby stormwater drain pipe constructed within the existing turfgrass area could divert and treat runoff from the parking lot and provide TMDL water quality credit.

- **South End of Parking Lot.** A bioretention area with native shrubs constructed within the existing turfgrass area, and reconstruction of the existing stormwater inlet with subdrains into the drain pipe could divert and treat a large area of runoff from the parking lot and provide significant TMDL water quality credit.

- **Unroofing of Drain Pipe.** The drain pipe south of the parking lot to the south border of the Park could be unroofed in whole or in part to create a naturally drained area with native plantings. Some areas adjacent to the unroofed pipe could be converted to naturalized meadow and trees to improve habitat and provide TMDL water quality credit.

- **Pervious Pavement.** The Park includes a large area of pavement in driveways and parking areas, and these paved areas are necessary. However, if any reconstruction of the existing paved areas are contemplated, consideration should be given to restoration of paved areas using pervious pavement materials.

c. Proposed Picnic Pavilion. The proposed site is near a large area of abandoned asphalt at the northeast end of the Park.

- The Committee feels that the proposed site is far from parking facilities, too secluded, and likely prone to crime.

- The Committee does not feel that the location of the proposed pavilion would be as convenient, attractive or safe as the existing pavilion.

d. Proposed Play Field. The proposed field is relatively small, and no uses were identified for it.

- The Committee feels that the existing small softball field and the lawn that extends beyond the outfield fence of the large softball field are suited for soccer and cricket.

- The Committee recommends that any reconstruction of the small softball field and nearby lawn areas should provide separate play fields for cricket and soccer activities.

e. Pathways & South Entrance. Some new paths are desirable, and the south entrance at Lackawanna Street is not as convenient or as attractive as it could be.

- The Committee feels that pedestrian-oriented improvements to the south entrance are needed for improved accessibility, and to make the Park more welcoming.

.

- The Committee feels that a new light-duty pervious pedestrian path through frequently wet areas from the south entrance to the existing path between the tennis courts and picnic pavilion would be desirable.

- The Committee feels that the feasibility of other light-duty pervious pedestrian paths to connect heavy foot traffic areas of the Park should be explored in the future.

f. Park Facilities and Furniture. The existing picnic pavilion and its furniture are popular and heavily used, but some benches, picnic tables, and trash containers are in poor condition. Improvements to the quality and quantity of furniture near the pavilion and ball fields would enhance the Park and encourage use.

- The Committee feels that the wooden picnic tables near the pavilion should be removed and replaced with picnic tables and benches on concrete slabs, and that one additional barbeque grill should be added.

- The Committee feels that existing trash containers of the Park should be upgraded, and that recycling containers should be added.

- The Committee feels that consideration should be given to improvements for ADA compliance and to promote accessibility by all users.

- The Committee feels that a welcoming sign with notice that the Park is closed after dark, and which provides park rules and phone number of Park Police should be installed outside the south entrance, and that a similar sign should be prominently installed at the north entrance.

- The Committee recommends study of the feasibility of constructing a 6-lane paved running workout track between the basketball courts and the fence of Al Huda School. The track would be 100 meters or 200 meters in length, and approximately parallel to the fence.

- The Committee recommends future study of seasonal and permanent restroom facilities, and other improvements that are consistent with existing Park features and recommendations of this Report.

6. Conclusions. The Committee requests that this Report be accepted by the NCPCA Membership and that the following Conclusions be approved:

a. The proposed stormwater pond would destroy important existing natural and recreational features of the Park, and would reduce future options for recreational development.

b. The alternative water treatment strategies identified in this Report should be investigated to improve water quality and to obtain TMDL water treatment credit.

c. The existing picnic pavilion and its mature trees and forest should be protected and enhanced.

d. The conversion of the small softball field and nearby lawn areas to soccer and cricket play fields, as well as pedestrian enhancements and improved park furniture would improve the appearance and recreational uses of the Park.

e. The construction of a workout track for running practice would provide a recreational facility that does not exist in a convenient nearby location.

f. No major changes are recommended to other existing natural areas, roadways, parking areas, play areas, large softball field, basketball courts or tennis courts. All of these features should be protected and enhanced as necessary to promote their future use by the community.

7. Additional Comments of Committee Members.

Matt Dernoga: These upgrades should be funded through Park and Planning capital improvement funds or other local and state funding sources such as program Open Space, not through the taking of half the park for a stormwater pond.

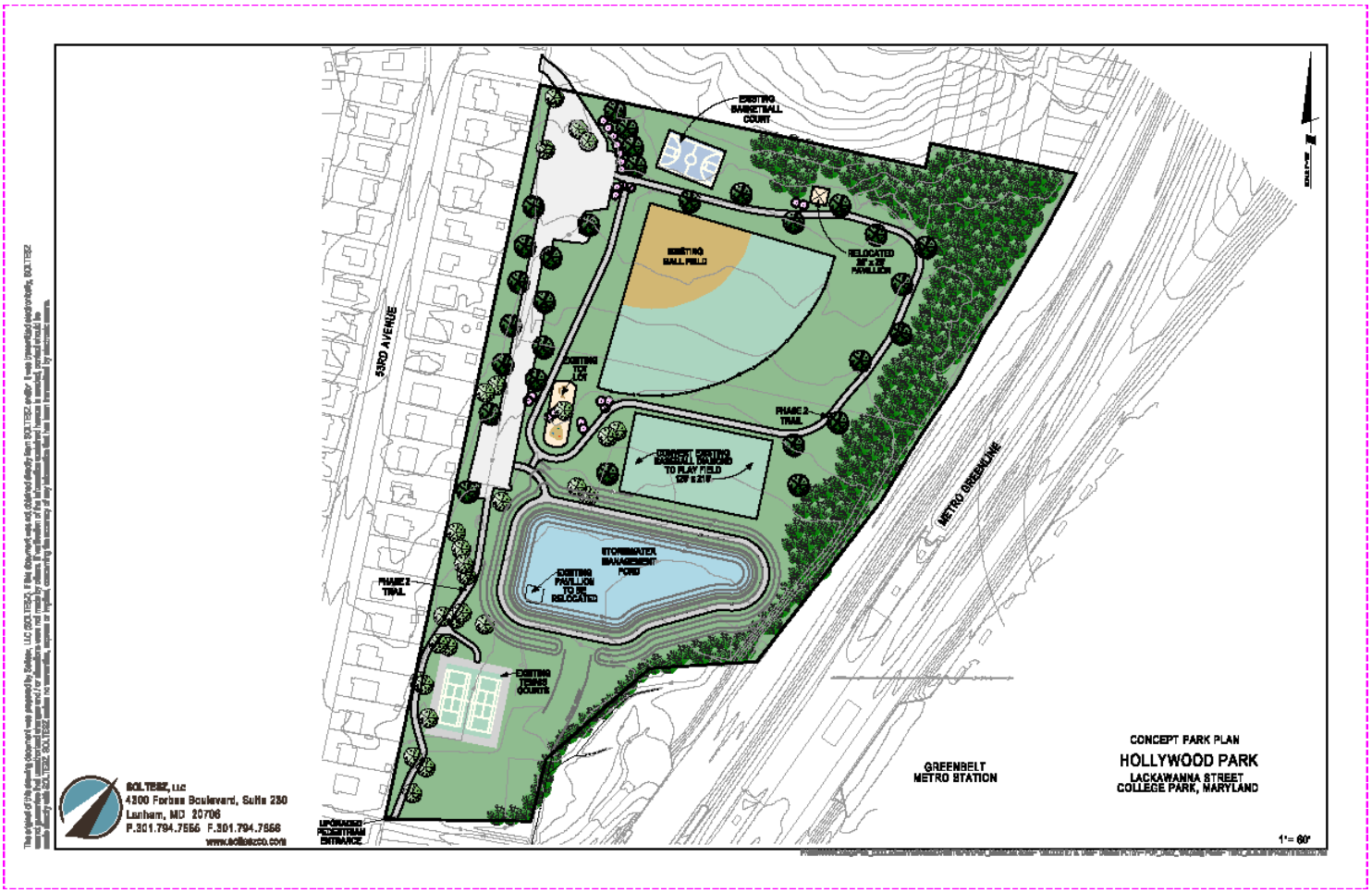
EXISTING BASKETBALL COURT
EXISTING BALL FIELD
RELOCATED 20' x 30' PAVILLION
EXISTING TOT LOT
PHASE 2 TRAIL
CONCEPT EXISTING BASEBALL FIELD LAYOUT TO PLAY FIELD 120' x 210'
STORMWATER MANAGEMENT POND
EXISTING PAVILLION TO BE RELOCATED
PHASE 2 TRAIL
EXISTING TENNIS COURTS
UPGRADED PEDESTRIAN ENTRANCE
53RD AVENUE
METRO GREENBELTLINE
GREENBELT METRO STATION
CONCEPT PARK PLAN
HOLLYWOOD PARK
LACKAWANNA STREET
COLLEGE PARK, MARYLAND
1"= 60'
SOLTESZ, LLC
4300 Forbes Boulevard, Suite 230
Lanham, MD 20706
P.301.794.7555 F.301.794.7558
www.soltesz.com

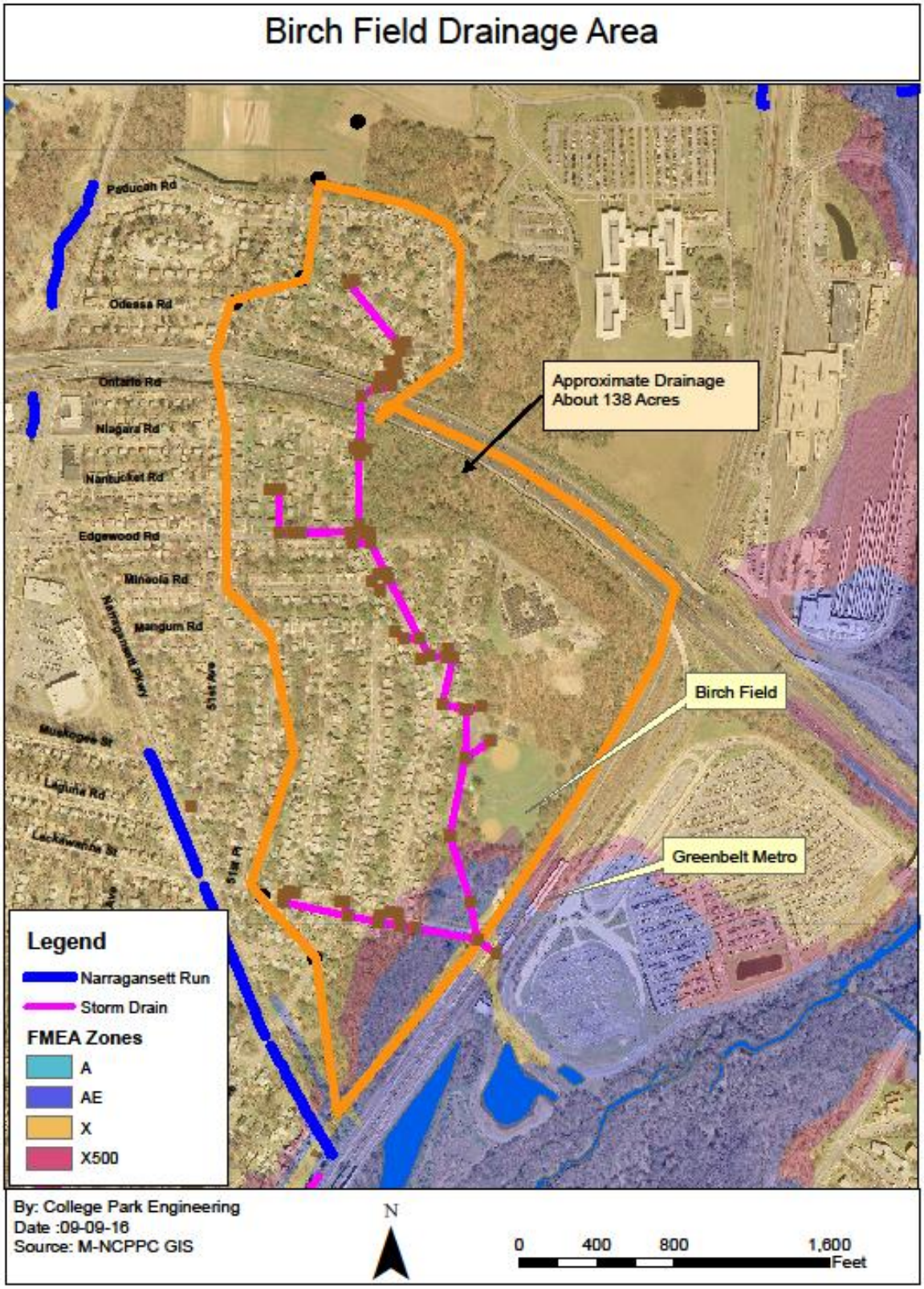
Birch Field Drainage Area
Paducah Rd
Odessa Rd
Ontario Rd
Niagara Rd
Nantucket Rd
Edgewood Rd
Mineola Rd
Mangum Rd
Narragansett Pkwy
51st Ave
Muskogee St
Laguna Rd
Lackawanna St
51st Pl
Approximate Drainage
About 138 Acres
Birch Field
Greenbelt Metro
Legend
Narragansett Run
Storm Drain
FMEA Zones
A
AE
X
X500
By: College Park Engineering
Date :09-09-16
Source: M-NCPPC GIS
N
0
400
800
1,600
Feet

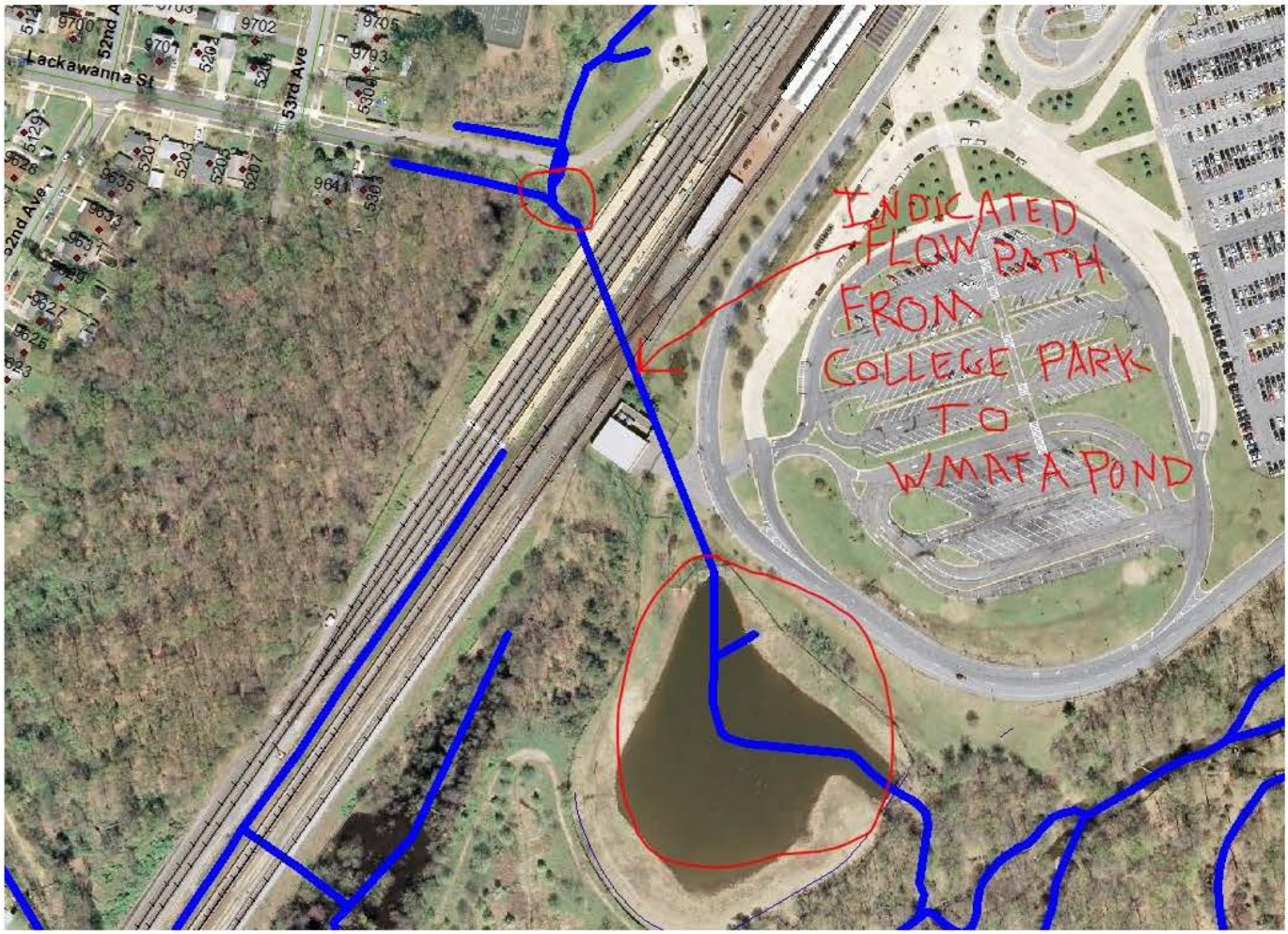
Lackawanna St
53rd Ave
52nd Ave
INDICATED FLOW PATH FROM COLLEGE PARK TO WMATA POND

10

Career staffing at the Branchville Volunteer Fire Department

M&C
Ryan

Branchville Volunteer Fire Company & Rescue Squad, Inc.,

4905 Branchville Rd, College Park, MD 20740
Phone: 301-883-7711, Fax: 301-345-8994
www.bvfco11.com

RECEIVED
OCT 13 2016
City of College Park
Administration Office

Date: October 4, 2016

To: Marc S. Bashoor, Fire Chief
Prince George's County Fire/EMS Department
9201 Basil Court, #452
Largo, MD 20774

CC: Rushern L. Baker III, County Executive
Nicolas Majett, Chief Administrative Officer
Glenda Wilson, Chief of Staff
Mark Magaw, DCAO for Public Safety
Patrick Wojahn, Mayor of College Park
Angela Alsobrooks, States Attorney
Jay Tucker, Chairman of the Fire Commission
William Cunningham, President of PGCVFRA

Re: Request for Career Staffing

Chief Bashoor,

This letter serves as an official request for daytime career staffing at the Branchville Volunteer Fire Company and Rescue Squad, Inc. The volunteers at Branchville have attempted to provide full-time staffing since the removal of the career staff in 2013. The demands of staffing a busy station 24 hours a day are proving to be an overwhelming stress on our membership and our unavailable status should be a glaring statistic to this point. The volunteer membership needs to return to staffing evenings, weekends and holidays. Currently we are spread too thin trying to cover our calls all day long. It is possible that if career staffing is not provided the response of fire, paramedic ambulance and ambulance service will diminish over time to the point where we will no longer be able to provide these life-saving services except on a very limited basis.

While our square mileage has not increased the population and number of structures within our first due response area have grown dramatically. High-rise apartment buildings along the Route 1 corridor, a large and heavily populated Greenbelt Station complex and the possibility of the FBI headquarters moving into our first engine response area should provide the County with enough data to justify career staffing at Branchville.

Statistically, your previous justification to deny career staffing was the close proximity of Branchville to other stations. With the addition of a new Oxon Hill Fire/EMS Station within your own criteria of "being too close" to other stations should also serve as justification that times and populations have changed throughout all areas of Prince George's County and not just the addition of the MGM Casino at National Harbor. Branchville and citizens of North College Park deserve as much protection as other citizens in the County are receiving.

Without the addition of career staffing, as the Volunteer Fire Chief, with the support of our Board of Directors, I will take whatever action is required to alert our citizens and other members of the public about our plight and the dangers that exist.

I remain available to discuss this matter with you at a mutually agreeable time.

Sincerely,

Richard W. Leizear
Volunteer Fire Chief
Branchville Volunteer Fire Company & Rescue Squad, Inc.

11

Agenda items for October 26 Four Cities Meeting in Greenbelt

12

Requests For/Status of Future Agenda items

TO: Mayor, City Council, City Manager and Department Directors

FROM: Janeen S. Miller, City Clerk

DATE: October 13, 2016

RE: Future Agendas

The following items are tentatively placed on future agendas. This list has been prepared by the City Manager and me, and represents the current schedule for items that will appear on future agendas.

OCTOBER 25, 2016 REGULAR MEETING

09-28-16: Proclamation: Small Business Saturday

Public Hearing on Ordinance 16-O-09, a proposal to lower the Homestead Tax Credit Rate from 4% to 2%

Introduction of FY '17 Budget Amendment #1 (to include OPH 200th Anniversary Celebration, City Hall generators, development consultant, and contribution to College Park Tennis Club) – Finance Department

Review of Maryland Department of Transportation FY 2018 Comprehensive Transportation Program (road show is November 10 at 2:00 p.m.) (Either October 25 RM or November 1 WS) – Terry Schum, Director of Planning

Closed Session following the Regular Meeting: 1) Consider the acquisition or sale of real property, Discuss a negotiating strategy, Consult with Counsel on a legal matter; 2) Discuss a Personnel Matter

NOVEMBER 1, 2016 WORKSESSION

Presentation: Zoning Rewrite Update on Module 3 – Chad Williams, M-NCPPC Staff

Discussion with University of Maryland representatives about their full plan of parking reductions and the impact to the City (Delayed from September 20, 2016 W/S, and October 11, 2016 R/M) Guest: David Allen, UMD Department of Transportation (20)

Discussion of procedure about responding to letters (20)

Discussion of revisions to Ordinance 16-O-07 re permit fees in downtown garage (follow up from September 27) – Bob Ryan, Director of Public Services

Award of Community Services Grants – Gary Fields, Director of Finance

Award of contract for Community Survey – Scott Somers, City Manager

Comprehensive review of City fees and fines (Chapter 110)

NOVEMBER 15, 2016 REGULAR MEETING

10-05-16: Proclamation: America Recycles Day

09-30-16: Proclamation: Recognition of Native American Heritage Month (?)

09-28-16: Award of Contract for Sound Barrier Removal Project

10-05-16: Award of Contract for Old Parish House Repairs

DECEMBER 6, 2016 WORKSESSION

Auditor presentation on the FY16 CAFR

07-05-16: Discussion of community garden and dog park in north College Park – Councilmembers Kabir and Nagle (20)

Comprehensive discussion of proposed development and the ability of our infrastructure to support it (30)

09-20-16: Resolution to establish a Committee on Senior Services/Aging in Place (need better title)

03-24-15: Review of the City's Emergency Preparedness Plan – Bob Ryan, Director of Public Services (30)

DECEMBER 13, 2016 REGULAR MEETING

8-24-16: Presentation on 2016 Resident Survey - Bill Gardiner, Assistant City Manager (date tentative)

(2017 DATES ARE TENTATIVE UNTIL APPROVED BY COUNCIL)

TUESDAY, JANUARY 3, 2017 WORKSESSION

08-10-16: Prohibiting sleeping in vehicles on City streets

09-06-16: Review number of cars per home and number of renters per home (Cook)

TUESDAY, JANUARY 10, 2017 REGULAR MEETING

TUESDAY, JANUARY 17, 2017 WORKSESSION

09-06-16: Creation of a public art fund (Brennan)

TUESDAY, JANUARY 24, 2017 REGULAR MEETING

TUESDAY, FEBRUARY 7, 2017 WORKSESSION

TUESDAY, FEBRUARY 14, 2017 REGULAR MEETING

PENDING AGENDA ITEMS

03-08-12: Trolley Trail negotiations – Suellen Ferguson, City Attorney

01-07-14: Model Public Participation Ordinance and community engagement – Mayor Wojahn

10-06-15: I-495 and Route 1 intersection safety improvements – SHA

10-20-15: Presentation of alternatives for Greenbelt Road at Rhode Island Avenue intersection – Venu Nemani, SHA District Engineer (if needed)

MASTER LIST

03-15-16: Discussion of drainage in the City – request of Councilmember Nagle

04-25-16: Business and development incentives for North College Park – request of Councilmember Kabir

05-04-16: Discussion of a “homeowners’ resources” fund to provide long-term loans to homeowners for home improvements that would be secured by a lien – request of Councilmember Nagle

06-07-16: Report from staff about how we are addressing issues of language barriers with our residents – request of Councilmember Kabir

Business Recycling (from FY ’17 budget W/S)

07-06-16: Report on usage-based trash pricing – CBE Workgroup report

07-05-16: Annual presentation from SHA on projects in the City (spring)

07-13-16: Comments on Module 2 (Subdivision and Development Regulations) of the County Zoning Rewrite – Terry Schum, Director of Planning

06-01-16: Review and discussion of Sections 184.43-44 Non-resident parking permits – Scott Somers, City Manager (15)

08-15-16: Status of the US Route 1 rebuild

08-24-16: Report on Compensation and Classification Study and Discussion about compensation philosophy – Jill Clements, Director of Human Resources

08-31-16: Award of contract for police services study – Bob Ryan, Director of Public Services

09-06-16: Every September – Discuss Homestead Tax Credit Rate

09-06-16: Comprehensive parking study (joint with UMD) (Wojahn)

09-09-16: Discussion of Post Office issues (if needed)

09-14-16: City philosophy on abandonment of rights of way

09-20-16: Volunteer database or volunteer coordination?

09-20-16: Survey of residents' transportation needs?

10-03-16: Discussion on frequency of rental inspections – Scott Somers, City Manager

Revisions to resolution establishing the Neighborhood Quality of Life Committee – Councilmembers Stullich and Brennan, and Bill Gardiner, Assistant City Manager

Budget Parking Lot:

FY 2015:

1. Public Services-Admin performance measure #2 (response within 1 business day) (Wojahn): Worksession follow-up (Bob Ryan)

FY 2016:

2. Performance Measures

FY 2017:

3. Amendment of City Code to allow a parking ban for snow removal or street cleaning
4. Subsidy of resident membership in mbike

13

Appointments to Boards and Committees

City of College Park
Board and Committee Appointments

Shaded rows indicate a vacancy or reappointment opportunity.
The date following the appointee's name is the initial date of appointment.

Advisory Planning Commission			
Appointee	Represents	Appointed by	Term Expires
Larry Bleau 7/9/02	District 1	Mayor	01/19
Rosemarie Green Colby 04/10/12	District 2	Mayor	04/18
Christopher Gill 09/24/13	District 1	Mayor	09/16
James E. McFadden 2/14/99	District 3	Mayor	04/16
Kate Kennedy 08/11/15	District 1	Mayor	08/18
Denise Mitchell 08/09/16	District 4	Mayor	08/19
John Rigg 01/12/16	District 3	Mayor	01/19
City Code Chapter 15 Article IV: The APC shall be composed of 7 members appointed by the Mayor with the approval of Council, shall seek to give priority to the appointment of residents of the City and assure that there shall be representation from each of the City's four Council districts. Vacancies shall be filled by the Mayor with the approval of the Council for the unexpired portion of the term. Terms are three years. The Chairperson is elected by the majority of the Commission. Members are compensated. Liaison: Planning.			

Airport Authority			
Appointee	Resides in	Appointed by	Term Expires
James Garvin 11/9/04	District 3	M&C	10/18
Jack Robson 5/11/04	District 3	M&C	03/17
Anna Sandberg 2/26/85	District 3	M&C	03/19
Gabriel Iriarte 1/10/06	District 3	M&C	04/16
Christopher Dullnig 6/12/07	District 2	M&C	01/17
David Kolesar 04/28/15	District 1	M&C	04/18
Dave Dorsch 08/11/15	District 3	M&C	08/18
City Code Chapter 11 Article II: 7 members, must be residents and qualified voters of the City, appointed by Mayor and City Council, for three-year terms. Vacancies shall be filled by M&C for an unexpired portion of a term. Authority shall elect Chairperson from membership. Not a compensated committee. Liaison: City Clerk's Office.			

Animal Welfare Committee			
Appointee	Resides in	Appointed by	Term Expires
Dave Turley 3/23/10	District 1	M&C	04/19
Patti Stange 6/8/10	Non resident	M&C	02/17
Taimi Anderson 6/8/10	Non resident	M&C	02/18
Suzie Bellamy 9/28/10	District 4	M&C	04/17
Nick Brennan 05/26/15	District 2	M&C	05/18
Kathy Rodeffer 11/24/15	Non resident	M&C	11/18
Christiane Williams 03/22/16	District 1	M&C	03/19
Resolution 15-R-26, 10-R-20: Up to fifteen members appointed by the Mayor and Council for three-year terms. Not a compensated committee. Liaison: Public Services.			

Board of Election Supervisors			
Appointee	Represents	Appointed by	Term Expires
John Robson (Chief) 5/24/94	Mayoral appt	M&C	03/17
Terry Wertz 2/11/97	District 1	M&C	03/17
Mary Katherine Theis 02/24/15	District 2	M&C	03/17
VACANT	District 3	M&C	03/17
Maria Mackie 08/12/14	District 4	M&C	03/17
City Charter C4-3: The Mayor and Council shall, not later than the first regular meeting in March of each year in which there is a general election, appoint and fix the compensation for five qualified voters as Supervisors of Elections, one of whom shall be appointed from the qualified voters of each of the four election districts and one of whom shall be appointed by the Mayor with the consent of the Council. The Mayor and Council shall designate one of the five Supervisors of Elections as the Chief of Elections. This is a compensated committee; compensation is based on a fiscal year. Per Council action (item 11-G-66) effective in March, 2013: In an election year all of the Board receives compensation. In a non-election year only the Chief Election Supervisor will be compensated. Liaison: City Clerk's office.			

Cable Television Commission			
Appointee	Resides in	Appointed by	Term Expires
Jane Hopkins 06/14/11	District 1	Mayor	09/17
VACANT		Mayor	
James Sauer 9/9/08	District 3	Mayor	10/16
VACANT		Mayor	
Normand Bernache 09/23/14	District 4	Mayor	09/17
City Code Chapter 15 Article III: Composed of four Commissioners plus a voting Chairperson, appointed by the Mayor with the approval of the Council, three year terms. This is a compensated committee. Liaison: City Manager's Office.			

Candidates' Debate Workgroup			
Appointee	Resides in	Appointed by	Term Expires
			The Workgroup will be discharged once their recommendations are presented to the City Council
Janeen S. Miller, City Clerk			
Suellen M. Ferguson, City Attorney			
Jack Robson, Chief, BOES			
Created 09/27/16 by Resolution 16-R-25. Up to 8 appointees who shall be residents, plus the City Clerk, City Attorney and Chief of the BOES. Workgroup shall select a chair from the members and get advice from the League of Women Voters. Liaison: City Clerk's Office			

College Park City-University Partnership			
Appointee	Represents	Appointed by	Term Expires
Carlo Colella	Class A Director	UMD President	06/30/18
Edward Maginnis	Class A Director	UMD President	06/30/18
Ken Ulman	Class A Director	UMD President	06/30/19
Brian Darmody	Class A Director	UMD President	06/30/17
Patrick L. Wojahn (01/12/16)	Class B Director	M&C	06/30/17
Maxine Gross	Class B Director	M&C	06/30/18
Senator James Rosapepe	Class B Director	M&C	06/30/19
Stephen Brayman	Class B Director	M&C	06/30/17
David Iannucci (07/15/14)	Class C Director	City and University	06/30/17
Dr. Richard Wagner	Class C Director	City and University	06/30/19
The CPCUP is a 501(c)(3) corporation whose mission is to promote and support commercial revitalization, economic development and quality housing opportunities consistent with the interests of the City of College Park and the University of Maryland. The CPCUP is not a City committee but the City makes appointments to the Partnership. Class B Directors are appointed by the Mayor and City Council; Class C Directors are jointly appointed by the Mayor and City Council and the President of the University of Maryland.			

Citizens Corps Council			
Appointee	Represents	Appointed by	Term Expires
VACANT		M&C	
Yonaton Kobrias 10/14/14		M&C	10/17
VACANT	Neighborhood Watch	M&C	
Dan Blasberg 3/27/12		M&C	03/18
David L. Milligan (Chair) 12/11/07		M&C	02/17
Marilyn Morin 04/12/16		M&C	04/19
Resolution 05-R-15. Membership shall be composed as follows: A Citizen Corps Coordinator for each neighborhood shall be nominated and appointed by the Mayor and Council and serve as a potential member of the CPCCC for the term of their respective office in the neighborhood group. Mayor and Council shall nominate and appoint 5 to 7 residents to serve as community coordinators and to serve on the CPCCC. At least one member of the CPCCC shall be the Neighborhood Watch Coordinator, and at least one member shall represent each of the other Citizen Corps programs such as CERT, Fire Corps, Volunteers In Police Service, etc. Each member of the CPCCC shall serve for a term of 3 years, and may be reappointed for an unlimited number of terms. The Mayor, with the approval of the City Council, shall appoint the Chair and Co-Chair of the CPCCC from among the members of the committee. The Director of Public Services shall serve as an ex officio member. Not a compensated committee. Liaison: Public Services.			

Committee For A Better Environment			
Appointee	Resides in	Appointed by	Term Expires
Janis Oppelt 8/8/06	District 1	M&C	01/19
Suchitra Balachandran 10/9/07	District 4	M&C	01/17
Donna Weene 9/8/09	District 1	M&C	01/19
Kennis Termini 01/14/14	District 1	M&C	01/17
Matt Dernoga 12/09/14	District 1	M&C	12/17
Karen Garvin 04/28/15	District 1	M&C	04/18
Susan Keller 05/26/15	District 1	M&C	05/18
Alan Hew 01/12/16	District 4	M&C	01/19
Daniel Walfield 02/23/16	District 1	M&C	02/19
Todd Larsen 03/22/16	District 2	M&C	03/19
Melissa Avery 04/12/16	District 4	M&C	04/19
Sarah D'Alexander 09/27/16	District 1	M&C	09/19
City Code Chapter 15 Article VIII: No more than 25 members, appointed by the Mayor and Council, three year terms, members shall elect the chair. Not a compensated committee. Liaison: Planning.			

Education Advisory Committee			
Appointee	Represents	Appointed by	Term Expires
Charlene Mahoney 12/11/12	District 2	M&C	02/17
Alethea Ten Eyck-Sanders 11/10/15	District 3	M&C	11/17
Melissa Day 9/15/10	District 3	M&C	03/17
Carolyn Bernache 2/9/10	District 4	M&C	12/16
Doris Ellis 9/28/10	District 4	M&C	12/16
Kendra Goodson 07/12/16	District 1	M&C	07/18
Peggy Wilson 6/8/10	UMCP	UMCP	05/16
Dawn Powers 1/26/16	District 2	M&C	01/18
David Toledo 04/25/16	District 1	M&C	04/18
Resolutions 15-R-25, 97-R-17, 99-R-4 and 10-R-13: At least 9 members who shall be appointed by the Mayor and Council: at least two from each Council District and one nominated by the University of Maryland. Two year terms. The Committee shall appoint the Chair and Vice-Chair of the Committee from among the members of the Committee. Not a compensated committee. Liaison: Youth and Family Services.			

Ethics Commission			
Appointee	Represents	Appointed by	Term Expires
Nora Eidelman 11/24/15	District 1	Mayor	11/17
Joe Theis 05/12/15	District 2	Mayor	05/17
James Sauer 12/09/14	District 3	Mayor	12/16
Gail Kushner 09/13/11	District 4	Mayor	01/18
Robert Thurston 9/13/05	At Large	Mayor	03/18
Alan C. Bradford 1/23/96	At-Large	Mayor	11/17
Frank Rose 05/08/12	At-Large	Mayor	03/18
City Code Chapter 38 Article II: Composed of seven members appointed by the Mayor and approved by the Council. Of the seven members, one shall be appointed from each of the City's four election districts and three from the City at large. 2 year terms. Commission members shall elect one member as Chair for a renewable one-year term. Commission members sign an Oath of Office. Not a compensated committee. Liaison: City Clerk's office.			

Housing Authority of the City of College Park			
Bob Catlin 05/13/14		Mayor	05/01/19
Betty Rodenhausen 04/09/13		Mayor	05/01/18
John Moore 9/10/96		Mayor	05/01/19
Thelma Lomax 7/10/90		Mayor	05/01/20
Carl Patterson 12/11/12	Attick Towers resident	Mayor	05/01/16
The College Park Housing Authority was established in City Code Chapter 11 Article I, but it operates independently under Article 44A Title I of the Annotated Code of Maryland. The Housing Authority administers low income housing at Attick Towers. The Mayor appoints five commissioners to the Authority; each serves a five year term; appointments expire May 1. Mayor administers oath of office. One member is a resident of Attick Towers. The Authority selects a chairman from among its commissioners. The Housing Authority is funded through HUD and rent collection, administers their own budget, and has their own employees. The City supplements some of their services.			

Dr. Martin Luther King, Jr. Tribute Committee			
Appointee	Represents	Appointed by	Term Expires
Anita Wolley 09/27/16	District 2	M&C	09/19
Lilla Sutton 09/27/16	District 2	M&C	09/19
Dottie Chicquelo	Non-resident	M&C	09/19
		M&C	
		M&C	
		M&C	
		M&C	
		M&C	
		M&C	
Between five and nine members, appointed by the Mayor and Council for three-year terms. The Committee shall appoint the Chair and Vice-Chair from among their membership annually. A quorum will consist of a majority of the appointed members. The Committee may work with partners such as the University of Maryland, the Maryland National Capital Park and Planning Commission, local schools and faith communities, and others as appropriate, in planning the event. Liaison: Public Services			

Neighborhood Quality of Life Committee			
Name:	Represents:	Appointed By:	Term Ends:
Mayor and City Council of the City of College Park			Term in office
Chief David Mitchell	UMD DPS (UMD Police)	University	02/16
Dr. Andrea Goodwin	UMD Administration – Rep 1	University	02/16
Marsha Guenzler-Stevens (Stamp Student Union)	UMD Administration – Rep 2	University	04/16
Matthew Supple (Fraternity-Sorority Life	UMD Administration – Rep 3	University	04/16
Gloria Aparicio-Blackwell (Office of Community Engagement)	UMD Administration – Rep 4	University	04/16
Karyn Keating-Volke	City Resident 1	City Council	02/17

Aaron Springer	City Resident 2	City Council	10/17
Bonnie McClellan	City Resident 3	City Council	04/16
Denise Mitchell 02/23/16	City Resident 4	City Council	02/18
Bob Schnabel	City Resident 5	City Council	08/17
VACANT	City Resident 6	City Council	
Cole Holocker	UMD Student 1	City Council	11/16
Adler Pruitt	UMD Student 2	City Council	09/17
VACANT	UMD Student 3	City Council	
Ian Henderson 02/23/16	UMD Student 4	IFC	02/18
VACANT	UMD Student 5	Nat'l Pan-Hell. Council, Inc. / United Greek Council	
Drew Hogg	Graduate Student	GSG Representative	09/17
VACANT	Student Co-Operative Housing	City Council	
Maj. Bill Alexander	PG County Police Dept.	PG County Police	
Bob Ryan	Director of Public Services	City Council	10/15
Jeannie Ripley	Manager of Code Enforcement	City Council	
Lisa Miller	Rental Property Owner	City Council	05/18
Richard Biffl	Rental Property Owner	City Council	02/16
Paul Carlson	Rental Property Owner	City Council	05/18

Established by Resolution 13-R-20 adopted September 24, 2013 to replace the Neighborhood Stabilization and Quality of Life Workgroup. Amended October 8, 2013 (13-R-20.Amended). Amended February 11, 2014 (14-R-03). Amended July 15, 2014 to change the name (14-R-23). City Liaison: City Manager's Office. Two year terms. Main Committee to meet four times per year. This is not a compensated committee.

Noise Control Board			
Appointee	Represents	Appointed by	Term Expires
Mark Shroder 11/23/10	District 1	Council, for District 1	01/19
Harry Pitt, Jr. 9/26/95	District 2	Council, for District 2	04/20
Alan Stillwell 6/10/97	District 3	Council, for District 3	09/20
Suzie Bellamy	District 4	Council, for District 4	12/16
Adele Ellis 04/24/12	Mayoral Appt	Mayor	08/20
Bobbie P. Solomon 3/14/95	Alternate	Council - At large	05/18
Larry Wenzel 3/9/99	Alternate	Council - At large	02/18

City Code Chapter 138-3: The Noise Control Board shall consist of five members, four of whom shall be appointed by the Council members, one from each of the four election districts, and one of whom shall be appointed by the Mayor. In addition, there shall be two alternate members appointed at large by the City Council. The members of the Noise Control Board shall select from among themselves a Chairperson. Four year terms. This is a compensated committee. Liaison: Public Services.

Recreation Board			
Appointee	Lives In	Appointed by	Term Expires
Eric Grims 08/12/14	District 1	M&C	08/17
Sarah Araghi 7/14/09	District 1	M&C	10/18
Alan C. Bradford 1/23/96	District 1	M&C	02/17
Adele Ellis 9/13/88	District 3	M&C	02/17
Barbara Pianowski 3/23/10	District 4	M&C	05/17
Judith Oarr 05/14/13	District 4	M&C	05/19
Bettina McCloud 1/11/11	District 1	M&C	02/17
David Toledo 04/25/16	District 1	M&C	04/19
Stuart Adams 05/24/16	District 3	M&C	05/19
VACANT		M&C	
City Code Chapter 15 Article II: Effective 2/2/16: 10 members appointed by the Mayor and Council for three-year terms with a goal of representation from each district. The Chairperson will be chosen from among and by the district appointees. Not a compensated committee. Additional participants include the University of Maryland liaison and the M-NCPPC liaison. Liaison: Public Services.			

Tree and Landscape Board			
Member	Represents	Appointed by	Term Expires
Christine O'Brien 08/11/15	Citizen	M&C	08/17
John Krouse	Citizen	M&C	10/16
VACANT	Citizen	M&C	
VACANT	Citizen	M&C	
Joseph M. Smith 09/23/14	Citizen	M&C	09/16
Janis Oppelt	CBE Chair Liaison		
John Lea-Cox 1/13/98	City Forester	M&C	04/17
Steve Beavers	Planning Director		
Brenda Alexander	Public Works Director		
City Code Chapter 179-5: The Board shall have 9 voting members: 5 residents appointed by M&C, the CBE Chair or designee, the City Forester or designee, the Planning Director or designee and the Public Works Director or designee. Two year terms. Members choose their own officers. Not a compensated committee. Liaison: City Clerk's office.			

Veterans Memorial Committee			
Appointee	Represents	Appointed by	Term Expires
Joseph Ruth 11/7/01	VFW	M&C	01/19
Blaine Davis 10/28/03	American Legion	M&C	01/19
Rita Zito 11/7/01		M&C	12/18
Doris Davis 10/28/03		M&C	01/19
Arthur Eaton		M&C	11/16
Seth Gomoljak 11/6/14		M&C	11/17
VACANT			
VACANT			
VACANT			

Resolution 15-R-27, 01-G-57: Board comprised of 9 to 13 members including at least one member from American Legion College Park Post 217 and one member from Veterans of Foreign Wars Phillips-Kleiner Post 5627. Appointed by Mayor and Council. Three year terms. Chair shall be elected each year by the members of the Committee. Not a compensated committee. Liaison: Public Works.